Chipsmall Limited consists of a professional team with an average of over 10 year of expertise in the distribution of electronic components. Based in Hongkong, we have already established firm and mutual-benefit business relationships with customers from,Europe,America and south Asia,supplying obsolete and hard-to-find components to meet their specific needs.

With the principle of “Quality Parts,Customers Priority,Honest Operation,and Considerate Service”,our business mainly focus on the distribution of electronic components. Line cards we deal with include Microchip,ALPS,ROHM,Xilinx,Pulse,ON,Everlight and Freescale. Main products comprise IC,Modules,Potentiometer,IC Socket,Relay,Connector.Our parts cover such applications as commercial,industrial, and automotives areas.

We are looking forward to setting up business relationship with you and hope to provide you with the best service and solution. Let us make a better world for our industry!

Contact us

Tel: +86-755-8981 8866 Fax: +86-755-8427 6832
Email & Skype: info@chipsmall.com Web: www.chipsmall.com
Address: A1208, Overseas Decoration Building, #122 Zhenhua RD., Futian, Shenzhen, China

Revision No. 变更数	Revisions 变更事项	Changed 修改者	Date 日期	Approved 确认者	Date 日期

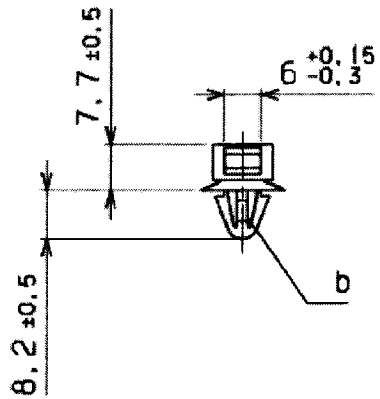

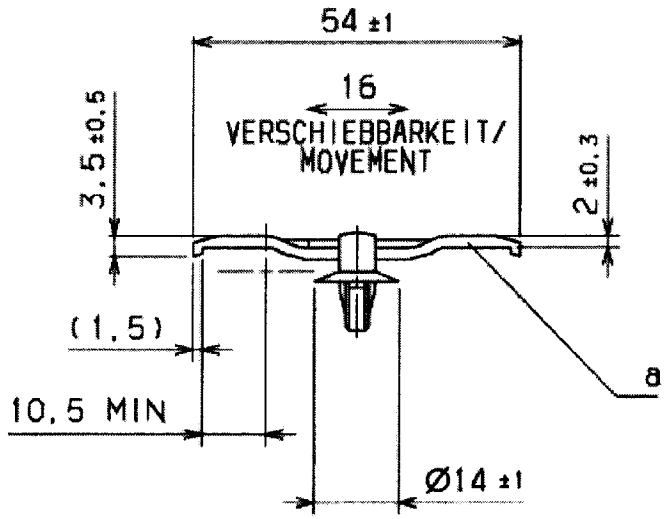

ØHOLE SIZE
/适用孔径
6.3-7.0mm

PANEL THICKNESS
/适用板厚
0.5-1.2mm

Standard Packing
标 准 包 装
500根/袋，20袋
（共10000根）/箱
500 Pcs/bag, 20 bags
(Total 10000Pcs)/box

CHA1: 黑色/black
CHA1.5: 绿色/green

EXAMPLE OF DESIGNATION
/部件名称说明
a) CH1
b) CHM1

Material/材料 :
CH1--尼龙66（聚酰胺66）
66 Nylon (Polyamid 66)
CHM1--尼龙66（聚酰胺66）
66 Nylon (Polyamid 66)

Dimension Units/尺寸单位
mm

PERFORMANCE / 性能
SPECIFICATION /标准

CAD

the copyright of this drawing is reserved by HELLERMANNTYTON.
it is issued on condition that it is not reproduced,copied or disclosed to a third party,either wholly or in part,without the consent of HELLERMANNTYTON.

Drawn/制图	HuangSheng	20/SEP/2005
Approved/审核	唐传文	20/9/2005

HellermannTyton
海尔曼太通（无锡）电器配件有限公司
(WUXI) Electrical Accessories Co.,Ltd.
Tel:+86-510-85282536
Fax:+86-510-85280112

Scale/比例 NO /无

Title/品名
CHA1/CHA1.5

Drawing-No/图号
QDQ201-00B-00

Format/格式
A4