Chipsmall Limited consists of a professional team with an average of over 10 year of expertise in the distribution of electronic components. Based in Hongkong, we have already established firm and mutual-benefit business relationships with customers from,Europe,America and south Asia,supplying obsolete and hard-to-find components to meet their specific needs.

With the principle of “Quality Parts,Customers Priority,Honest Operation,and Considerate Service”,our business mainly focus on the distribution of electronic components. Line cards we deal with include Microchip,ALPS,ROHM,Xilinx,Pulse,ON,Everlight and Freescale. Main products comprise IC,Modules,Potentiometer,IC Socket,Relay,Connector.Our parts cover such applications as commercial,industrial, and automotives areas.

We are looking forward to setting up business relationship with you and hope to provide you with the best service and solution. Let us make a better world for our industry!

Contact us

Tel: +86-755-8981 8866 Fax: +86-755-8427 6832
Email & Skype: info@chipsmall.com Web: www.chipsmall.com
Address: A1208, Overseas Decoration Building, #122 Zhenhua RD., Futian, Shenzhen, China

NOTES:

-SECURE WITH BUTTON HEAD TIES

-HOLE LOCATING PROTRUSION FOR 1/2" MOUNTING HOLE

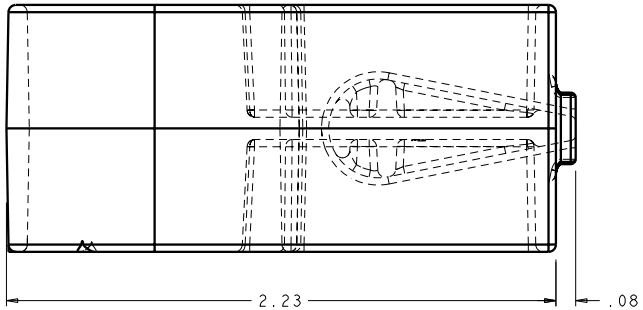

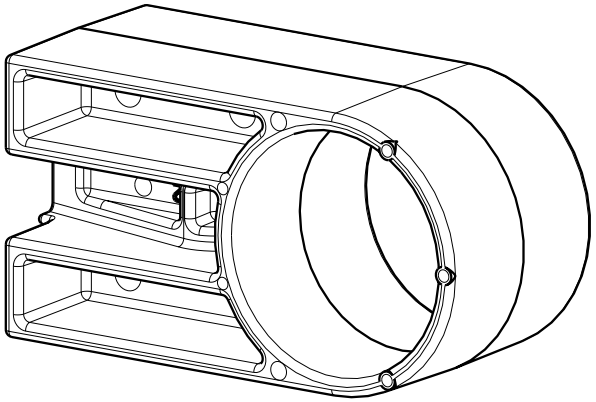

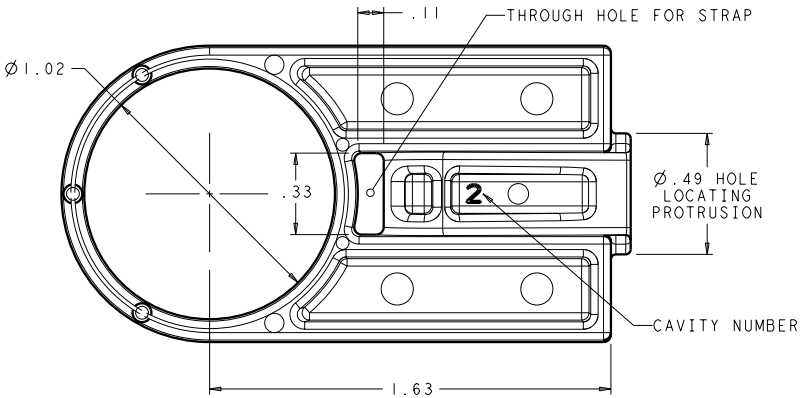

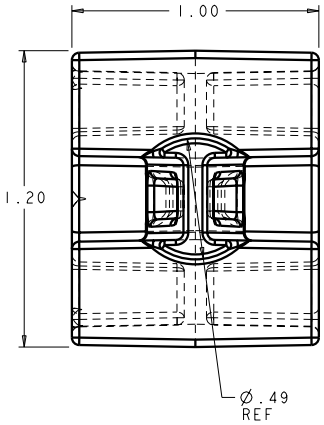

INVENTORS			
HellermannTyton®			
ALL PROPRIETARY RIGHTS IN THE SUBJECT MATTER SHOWN ON THIS DRAWING ARE EXCLUSIVE PROPERTY OF HELLERMANNTYTON			
name	date	city, state	
MIKE GROLL	12/12/03	PORT WASHINGTON, WI	

REVISION		
DRAWING	level	02
	by	GGG
	date	1/12/09
	ECN #	011210
	part level	A

DIMENSIONS	
TOLERANCES	.XXXX= ±0.005
	.XXX= ±0.010
	.XX= ±0.02
	.X= ±0.1
	∠= ±0.5
	unless otherwise specified
units	inches

PART			
number	CGS1	phase	PRODUCTION 02
name	STANDOFF CABLE GUIDE		
material	NYLON 6/6 IMHSUV		

DRAWING			
FORMAT AH version J	CAD PRO-E	scale 3/2	
computer file number		previous number	
drawn MIKE GROLL 12/12/03	checked K CHRISTIAN 1/12/09	approved	
type CUSTOMER		sheet 1 of 1	
number MT2032002CST			