Chipsmall Limited consists of a professional team with an average of over 10 year of expertise in the distribution of electronic components. Based in Hongkong, we have already established firm and mutual-benefit business relationships with customers from,Europe,America and south Asia,supplying obsolete and hard-to-find components to meet their specific needs.

With the principle of “Quality Parts,Customers Priority,Honest Operation,and Considerate Service”,our business mainly focus on the distribution of electronic components. Line cards we deal with include Microchip,ALPS,ROHM,Xilinx,Pulse,ON,Everlight and Freescale. Main products comprise IC,Modules,Potentiometer,IC Socket,Relay,Connector.Our parts cover such applications as commercial,industrial, and automotives areas.

We are looking forward to setting up business relationship with you and hope to provide you with the best service and solution. Let us make a better world for our industry!

Contact us

Tel: +86-755-8981 8866 Fax: +86-755-8427 6832
Email & Skype: info@chipsmall.com Web: www.chipsmall.com
Address: A1208, Overseas Decoration Building, #122 Zhenhua RD., Futian, Shenzhen, China

SW2011

Revision level		Revision Record	Changed	Date	Approved	Date
Drawing	Part					
04	-	SEE ECN# 012511	CJR	11/27/2013	CJR	11/27/2013

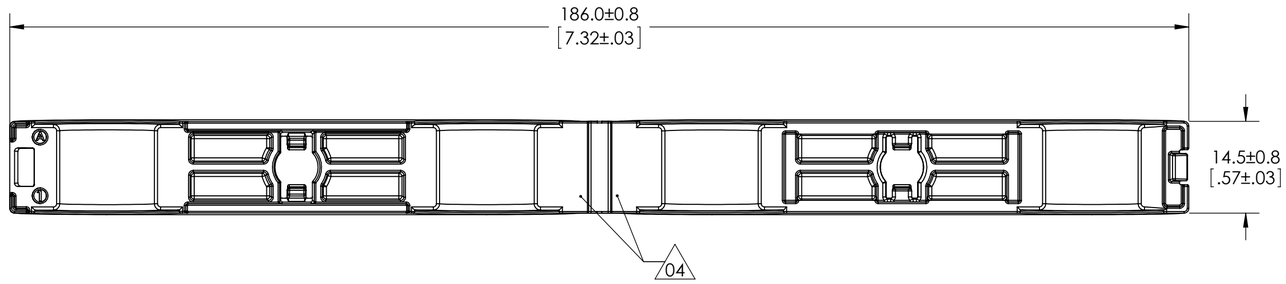

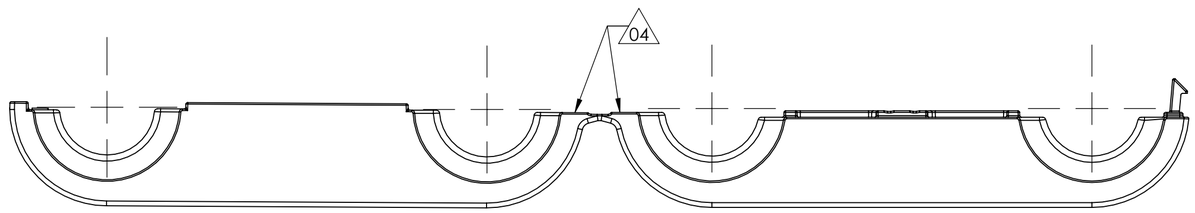

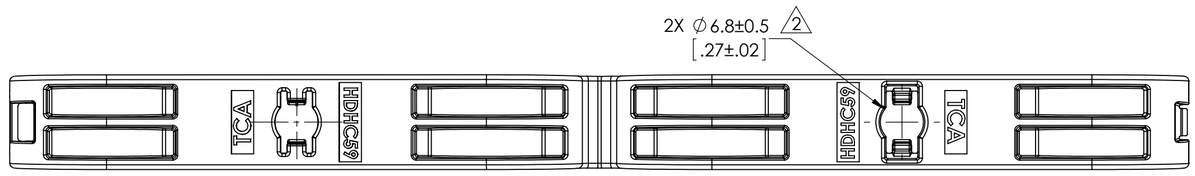

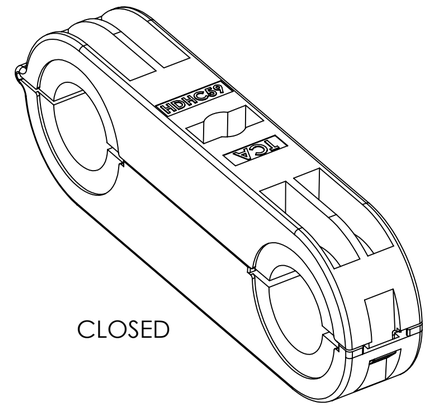

CLOSED

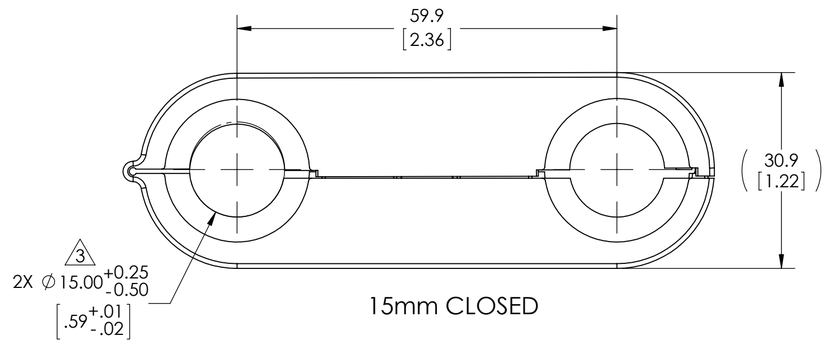

15mm CLOSED

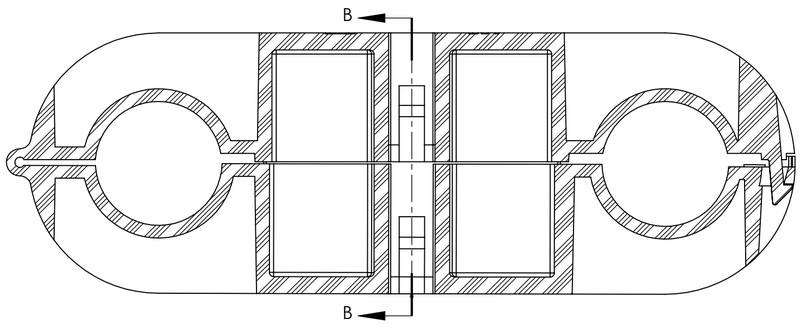

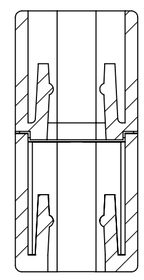

SECTION B-B
SCALE 2 : 1

Notes

CUSTOMER REFERENCE ONLY
- PA46 MATERIAL IS CAPABLE OF WITHSTANDING A CONTINUOUS TEMPERATURE OF 140°C FOR 10,000 HRS.
  ACTUAL PART PERFORMANCE SHOULD BE TESTED IN APPLICATION CONDITIONS.

Material: PA46

Units: millimeters

Dimension without tolerances details to:
.XXXX = ±.0025
.XXX = ±.013
.XX = ±.13
.X = ±.3
None = ±.8
∠ = ±0.5°

The copyright of this drawing is reserved by HellermannTyton. It is issued on condition that it is not reproduced, copied, or disclosed to a third party, either wholly or in part, without the consent of HellermannTyton.

Drawn	CJR	12/11/2012
Approved	CJR	12/11/2012

HellermannTyton
North America
Email: corp@htamericas.com
Web: www.hellermann.tyton.com

Article/Type-No: HDHC59
Title: HINGED DUAL CLAMP W/ SNAP
Drawing-No: 12-0423-031-CSU
Production : Phase

Scale: 1.5:1
Project Number: PRP12-0423
Format: C
Sheet: 1/1