Chipsmall Limited consists of a professional team with an average of over 10 year of expertise in the distribution of electronic components. Based in Hongkong, we have already established firm and mutual-benefit business relationships with customers from,Europe,America and south Asia,supplying obsolete and hard-to-find components to meet their specific needs.

With the principle of “Quality Parts,Customers Priority,Honest Operation,and Considerate Service”,our business mainly focus on the distribution of electronic components. Line cards we deal with include Microchip,ALPS,ROHM,Xilinx,Pulse,ON,Everlight and Freescale. Main products comprise IC,Modules,Potentiometer,IC Socket,Relay,Connector.Our parts cover such applications as commercial,industrial, and automotives areas.

We are looking forward to setting up business relationship with you and hope to provide you with the best service and solution. Let us make a better world for our industry!

Contact us

Tel: +86-755-8981 8866 Fax: +86-755-8427 6832
Email & Skype: info@chipsmall.com Web: www.chipsmall.com
Address: A1208, Overseas Decoration Building, #122 Zhenhua RD., Futian, Shenzhen, China

SW2015

Revision level			Revision Record	Changed	Date	Approved	Date
Drawing	State	Part					
08.1	**Design Release**	A	SEE ECN# 013562	GAL	10/24/16	GGG	10/24/16

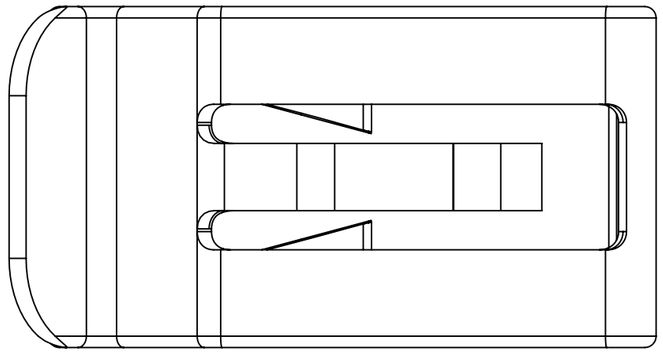

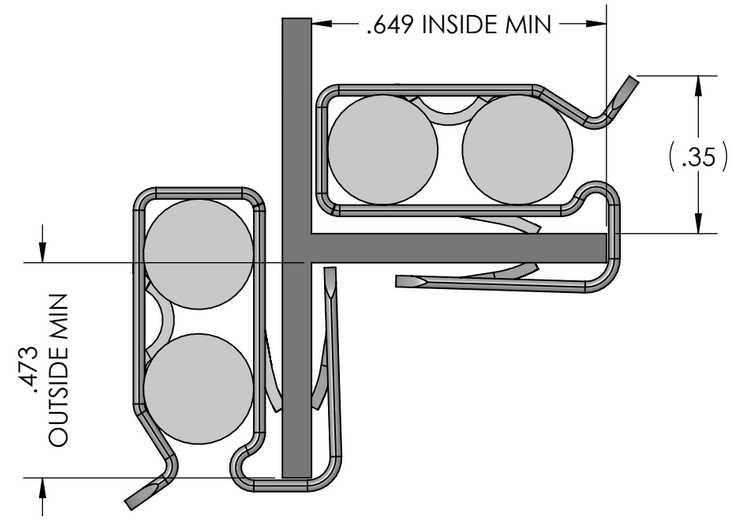

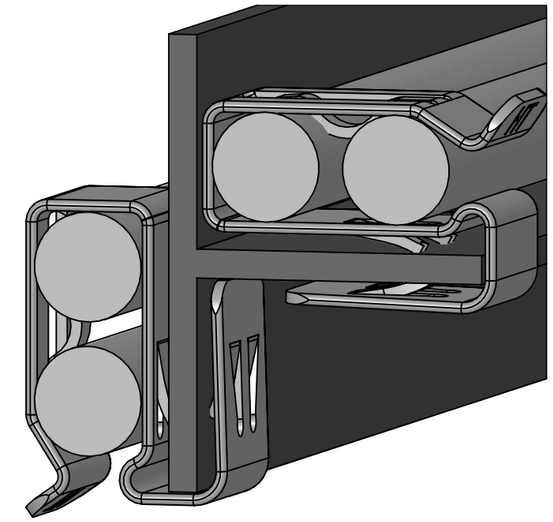

Assembled
SCALE 3:1

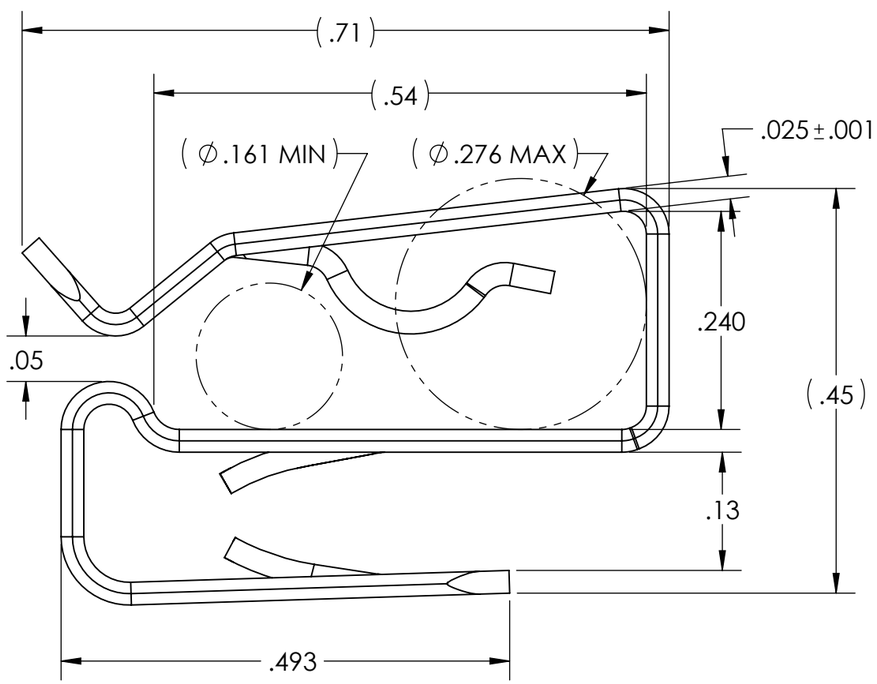

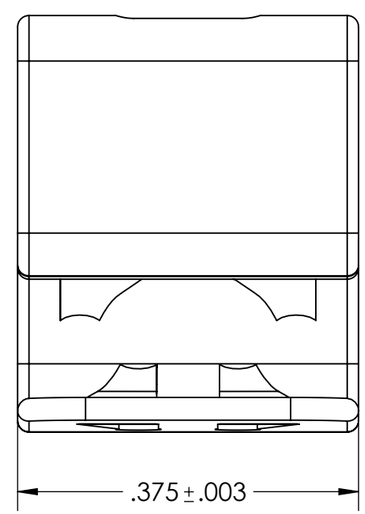

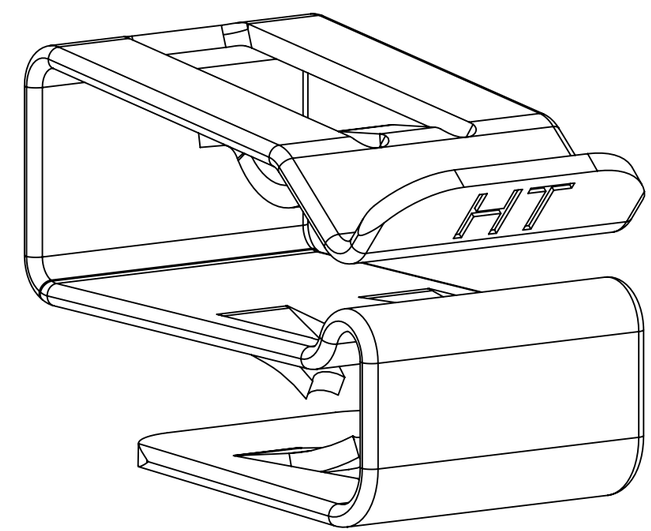

Notes
PANEL THICKNESS RANGE: .059in - .078in
CABLE DIAMETER RANGE: .161in - .276in
INSIDE MIN PANEL DEPTH: .649"
OUTSIDE MIN PANEL DEPTH: .473"

Material

304 3/4 HARD STAINLESS STEEL ROUND EDGE
ROHS COMPLIANT

Units: inches

Dimension without tolerances details to:
.XXXX = ±.0005
.XXX = ±.005
.XX = ±.01
.X = ±.03
None = ±.06
∠ = ±0.5°

Dimension Formatted in/[mm]

The copyright of this drawing is reserved by HellermannTyton. It is issued on condition that it is not reproduced, copied, or disclosed to a third party, either wholly or in part, without the consent of HellermannTyton.

Drawn	GAL	4/14/16
Approved	GGG	4/14/16

HellermannTyton
North America
Email: corp@htamericas.com
Web: www.hellermann.tyton.com

Article/Type-No: MSC2LP

Title: METAL SOLAR CLIP LOW PROFILE

Drawing-No: **15-0354-001-CSU**

Production : Phase

Scale: 6:1

Project Number: PRP15-0354

Format: B

Sheet: 1/1