Chipsmall Limited consists of a professional team with an average of over 10 year of expertise in the distribution of electronic components. Based in Hongkong, we have already established firm and mutual-benefit business relationships with customers from,Europe,America and south Asia,supplying obsolete and hard-to-find components to meet their specific needs.

With the principle of “Quality Parts,Customers Priority,Honest Operation,and Considerate Service”,our business mainly focus on the distribution of electronic components. Line cards we deal with include Microchip,ALPS,ROHM,Xilinx,Pulse,ON,Everlight and Freescale. Main products comprise IC,Modules,Potentiometer,IC Socket,Relay,Connector.Our parts cover such applications as commercial,industrial, and automotives areas.

We are looking forward to setting up business relationship with you and hope to provide you with the best service and solution. Let us make a better world for our industry!

Contact us

Tel: +86-755-8981 8866 Fax: +86-755-8427 6832
Email & Skype: info@chipsmall.com Web: www.chipsmall.com
Address: A1208, Overseas Decoration Building, #122 Zhenhua RD., Futian, Shenzhen, China

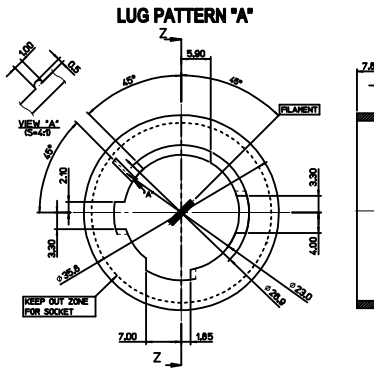

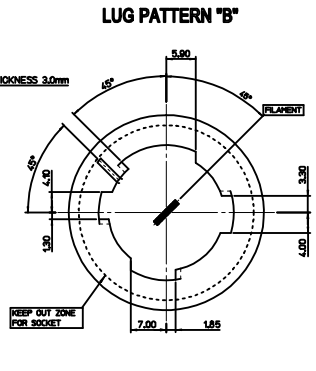

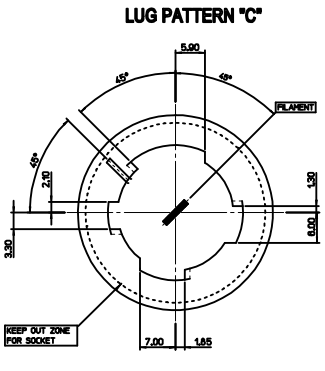

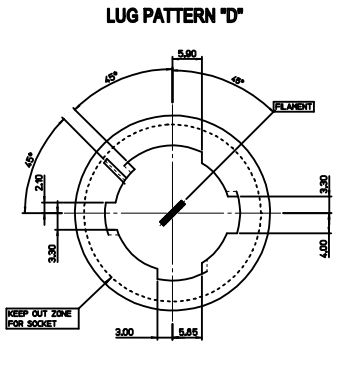

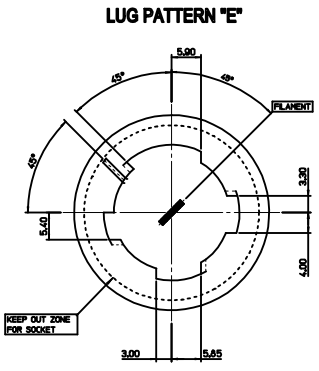

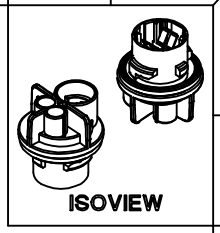

TYPE "A"
<WTY21W/7W WZX2.5x16q TYPE>

TYPE "B"
<WT21W/7W WZX2.5x16q TYPE>

TYPE "C"
<WTY28/7W WUZ2.5x16q TYPE>

BULB TYPE: DOUBLE

TYPE "D"
<WTY21W WUY2.5x16dTYPE>

TYPE "E"
<WT21W WUX2.5x16d TYPE>

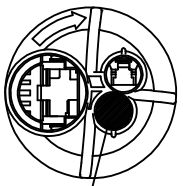

DUMMY SEAL POSITION
SINGLE BULB ONLY

BULB TYPE: SINGLE

TYPE
0-SEALED
1-UNSEALED

LUG PATTERN
1 - TYPE "A"
2 - TYPE "B"
3 - TYPE "C"
4 - TYPE "D"
5 - TYPE "E"

XXXXX - XXXX

MXK SERIES NO. — CIRCUIT NO. — SOCKET COLOR
0 - NATURAL
1 - BLACK
5 - GRAY

<TABLE 1>

SOCKET TYPE	MATERIAL NO.	ORDER NO.	FOCAL LENGTH
TYPE "A"	1046110311	104611-0311	31.80
TYPE "B"	1046110321	104611-0321	
TYPE "C"	1046110331	104611-0331	
TYPE "D"	1046110341	104611-0341	
TYPE "E"	1046110351	104611-0351	

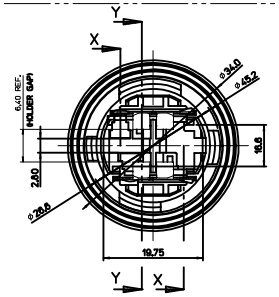

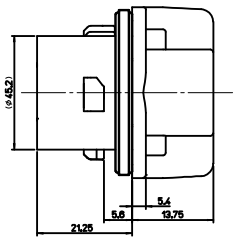

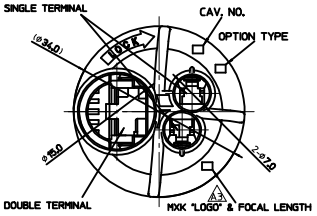

NOTE
1. PANEL THICKNESS : 3.0mm±0.1
2. APPLICABLE LAMP : WT21/7W, WTY21/7W, WTY28W/7W, WT21W, WTY21W
3. PART MUST CONFORM TO SAE/USCAR-15.
4. MATES WITH

DESCRIPTION	MATERIAL	PART NO.	WIRE RANGE	REMARK
SINGLE TERMINAL	BRASS	49869-9702	AVS 0.5~0.85mm²	---
DOUBLE TERMINAL	BRASS	49868-9702	AVS 0.5~0.85mm²	---
WIRE SEAL - S	SILICONE	49454-9002	1.8~2.2mm(INS. DIA.)	RED
WIRE SEAL - L	SILICONE	49454-9003	1.8~2.2mm(INS. DIA.)	RED
DUMMY SEAL	SILICONE	49454-9004	-	RED

<PARTS LIST>

NO.	DESCRIPTION	MATERIAL	LUG PATTERN	APPLICABLE BULB TYPE	REMARK	USAGE
①	FLOOR SEAL	SILICONE	---	---	WHITE	1
②	LAMP HOLDER-R	SUS	---	---	UNPLATED	1
③	LAMP HOLDER-L	SUS	---	---	UNPLATED	1
④	WT21 SOCKET - TYPE A	LCP, 32%	A	WTY DF(AMBER, WZX2.5x16q)	BLACK	1
	WT21 SOCKET - TYPE B	LCP, 32%	B	WT DF(CLEAR, WZX2.5x16q)		
	WT21 SOCKET - TYPE C	LCP, 32%	C	WTY DF(AMBER, WUZ2.5x16q)		
	WT21 SOCKET - TYPE D	LCP, 32%	D	WTY SF(AMBER, WUY2.5x16d)		
	WT21 SOCKET - TYPE E	LCP, 32%	E	WT SF(CLEAR, WUX2.5x16d)		

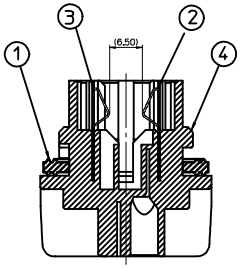

SECTION Y-Y

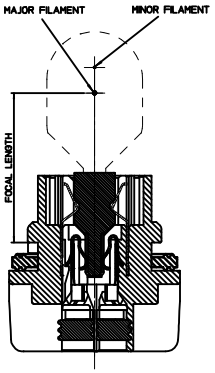

SECTION X-X
(TERMINAL ASS'Y)

REVISED&REDRAWING
EC NO: KTR2016-0064 2016/03/29
DRWN:SWYOON
CHKD:
APPR:JYCHOI 2016/04/12
REV | DESCRIPTION

QUALITY SYMBOLS
▼=0
Ⓒ=0

GENERAL TOLERANCES (UNLESS SPECIFIED)

	mm	INCH
4 PLACES	± ---	± ---
3 PLACES	± ---	± ---
2 PLACES	± 0.20	± ---
1 PLACE	± 0.3	± ---
ANGULAR ± 3 °		

DRAFT WHERE APPLICABLE MUST REMAIN WITHIN DIMENSIONS

DIMENSION STYLE: MM ONLY
SCALE: 2/1
DESIGN UNITS: METRIC
THIRD ANGLE PROJECTION

DRAWN BY: SWYOON DATE: 2015/12/09
CHECKED BY: BCYOON DATE: 2015/12/09
APPROVED BY: JYCHOI DATE: 2015/12/15

TITLE: WT21 BULB SOCKET SEALED TYPE

molex MOLEX INCORPORATED

MATERIAL NO.: SEE TABLE 1
DOCUMENT NO.: SD-104611-001
SHEET NO.: 1 OF 1
SIZE: A1 A3

THIS DRAWING CONTAINS INFORMATION THAT IS PROPRIETARY TO MOLEX INCORPORATED AND SHOULD NOT BE USED WITHOUT WRITTEN PERMISSION

tb_frame_A1_P_ME_T
Rev. E 2006/04/15