Chipsmall Limited consists of a professional team with an average of over 10 year of expertise in the distribution of electronic components. Based in Hongkong, we have already established firm and mutual-benefit business relationships with customers from,Europe,America and south Asia,supplying obsolete and hard-to-find components to meet their specific needs.

With the principle of “Quality Parts,Customers Priority,Honest Operation,and Considerate Service”,our business mainly focus on the distribution of electronic components. Line cards we deal with include Microchip,ALPS,ROHM,Xilinx,Pulse,ON,Everlight and Freescale. Main products comprise IC,Modules,Potentiometer,IC Socket,Relay,Connector.Our parts cover such applications as commercial,industrial, and automotives areas.

We are looking forward to setting up business relationship with you and hope to provide you with the best service and solution. Let us make a better world for our industry!

# Contact us

Tel: +86-755-8981 8866 Fax: +86-755-8427 6832
Email & Skype: info@chipsmall.com Web: www.chipsmall.com
Address: A1208, Overseas Decoration Building, #122 Zhenhua RD., Futian, Shenzhen, China

THIS DRAWING IS UNPUBLISHED. RELEASED FOR PUBLICATION -,- .
© COPYRIGHT - BY TYCO ELECTRONICS CORPORATION. ALL RIGHTS RESERVED.

| LOC | DIST |
|---|---|
| G | 86 |

REVISIONS

| P | LTR | DESCRIPTION | DATE | DWN | APVD |
|---|---|---|---|---|---|
| | E1 | REVISED PER ECR 07-018343 | 06AUG07 | JR | TM |

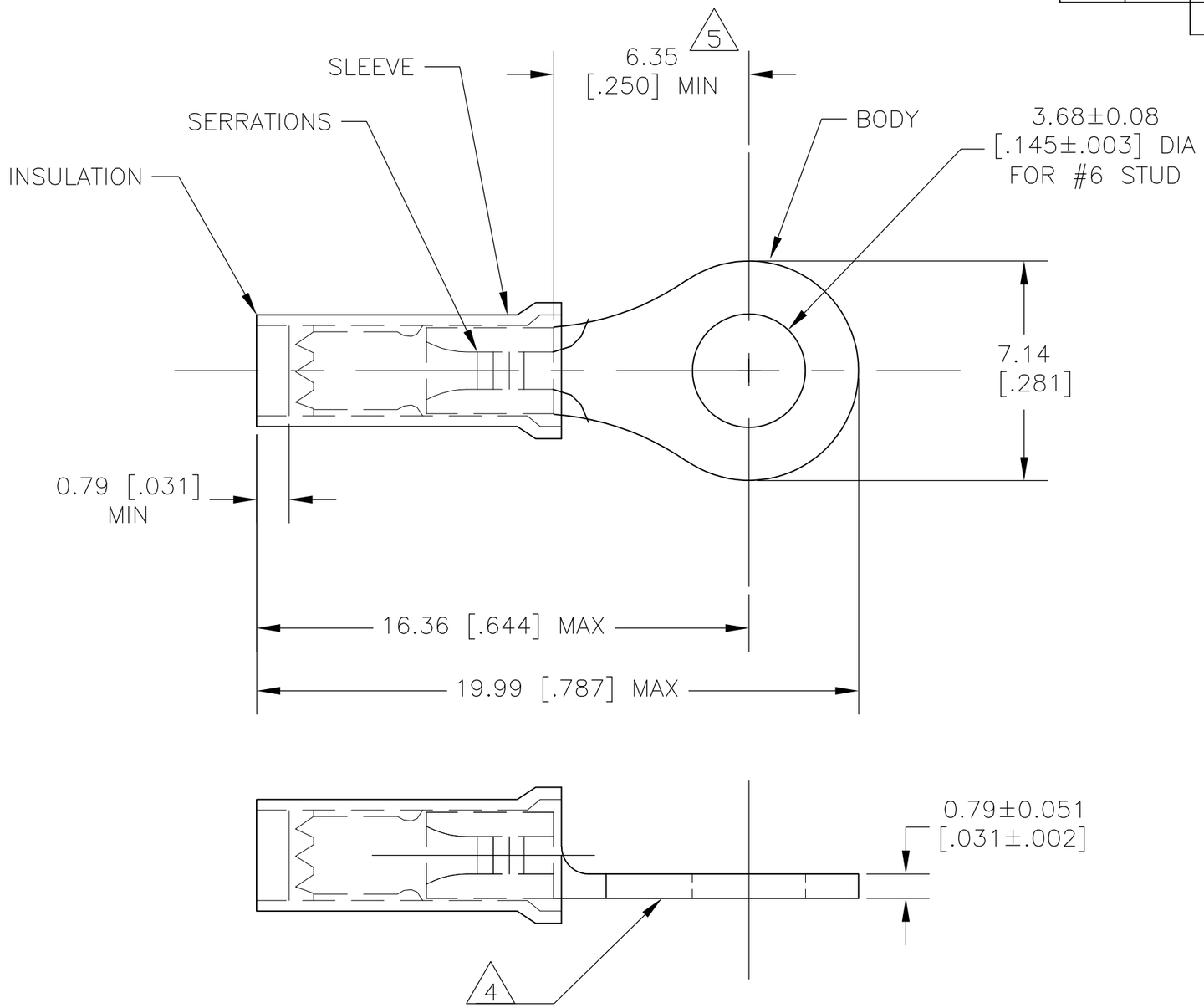


1. BODY - COPPER PER ASTM B152 ANNEALED
   SLEEVE - COPPER PER ASTM B152
   INSULATION - NYLON
2. BODY & SLEEVE - TIN PLATED
   INSULATION - COLOR - PURPLE
3. FOR 1.14-2.03 [.045-.080] DIA WIRE INSULATION
4. STAMP AMP 20, APPROX WHERE SHOWN.
5. APPLIES FROM EDGE OF METAL WIRE BARREL TO CENTERLINE OF STUD HOLE.
6. 0.41-0.65mm2 [810-1,290] CMA SOLID OR STRANDED

| QTY | PACKAGING TYPE | PART NO. |
|---|---|---|
| 1000 | LOOSE PIECE | 152895 |

THIS DRAWING IS A CONTROLLED DOCUMENT.

DIMENSIONS: MM [ INCHES ]

TOLERANCES UNLESS OTHERWISE SPECIFIED:

| | |
|---|---|
| 0 PLC | ± - |
| 1 PLC | ± - |
| 2 PLC | ± - |
| 3 PLC | ± 0.38 [.015] |
| 4 PLC | ± - |
| ANGLES | ± 5° |

MATERIAL - 1

FINISH - 2

| | | |
|---|---|---|
| DWN | jr ruth | 06AUG07 |
| CHK | T MICHIELUTTI | 30AUG07 |
| APVD | T MICHIELUTTI | 30AUG07 |
| PRODUCT SPEC | — | |
| APPLICATION SPEC | — | |
| WEIGHT | — | |

Tyco Electronics

Tyco Electronics Corporation
Harrisburg, PA 17105-3608

NAME: RING TONGUE, PIDG — —

| SIZE | CAGE CODE | DRAWING NO | RESTRICTED TO |
|---|---|---|---|
| A3 | 00779 | C-152895 | — |

CUSTOMER DRAWING

| SCALE | SHEET | REV |
|---|---|---|
| 6:1 | 1 OF 1 | E1 |