Chipsmall Limited consists of a professional team with an average of over 10 year of expertise in the distribution of electronic components. Based in Hongkong, we have already established firm and mutual-benefit business relationships with customers from,Europe,America and south Asia,supplying obsolete and hard-to-find components to meet their specific needs.

With the principle of “Quality Parts,Customers Priority,Honest Operation,and Considerate Service”,our business mainly focus on the distribution of electronic components. Line cards we deal with include Microchip,ALPS,ROHM,Xilinx,Pulse,ON,Everlight and Freescale. Main products comprise IC,Modules,Potentiometer,IC Socket,Relay,Connector.Our parts cover such applications as commercial,industrial, and automotives areas.

We are looking forward to setting up business relationship with you and hope to provide you with the best service and solution. Let us make a better world for our industry!

Contact us

Tel: +86-755-8981 8866 Fax: +86-755-8427 6832
Email & Skype: info@chipsmall.com Web: www.chipsmall.com
Address: A1208, Overseas Decoration Building, #122 Zhenhua RD., Futian, Shenzhen, China

THIS DRAWING IS UNPUBLISHED. RELEASED FOR PUBLICATION 2011
© COPYRIGHT 2011 TE CONNECTIVITY ALL RIGHTS RESERVED.

LOC	DIST
B	-

REVISIONS

P	LTR	DESCRIPTION	DATE	DWN	APVD
	H	ECR-11-018847	13/09/11	JB	MG

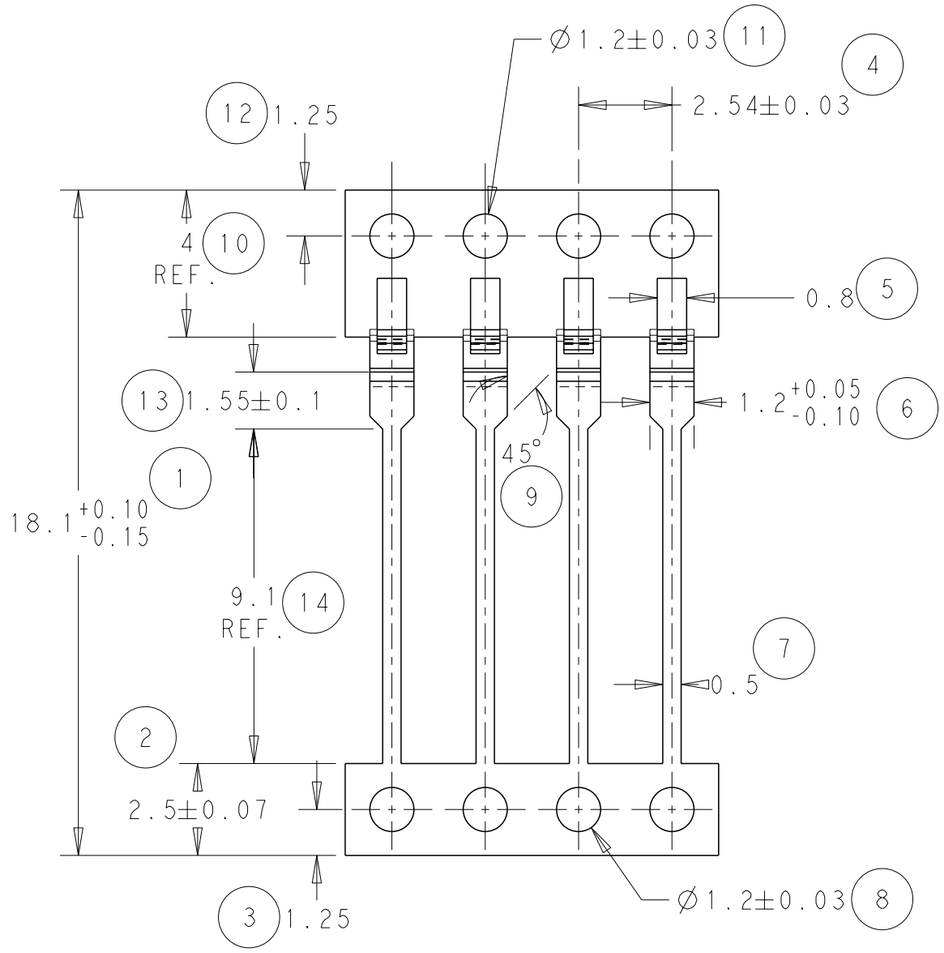

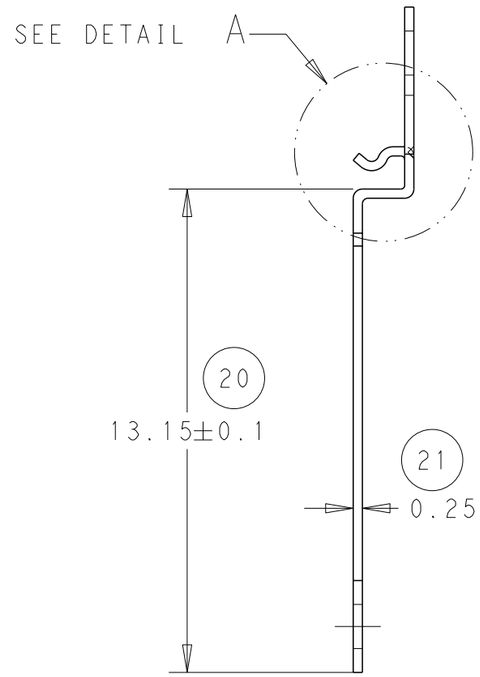

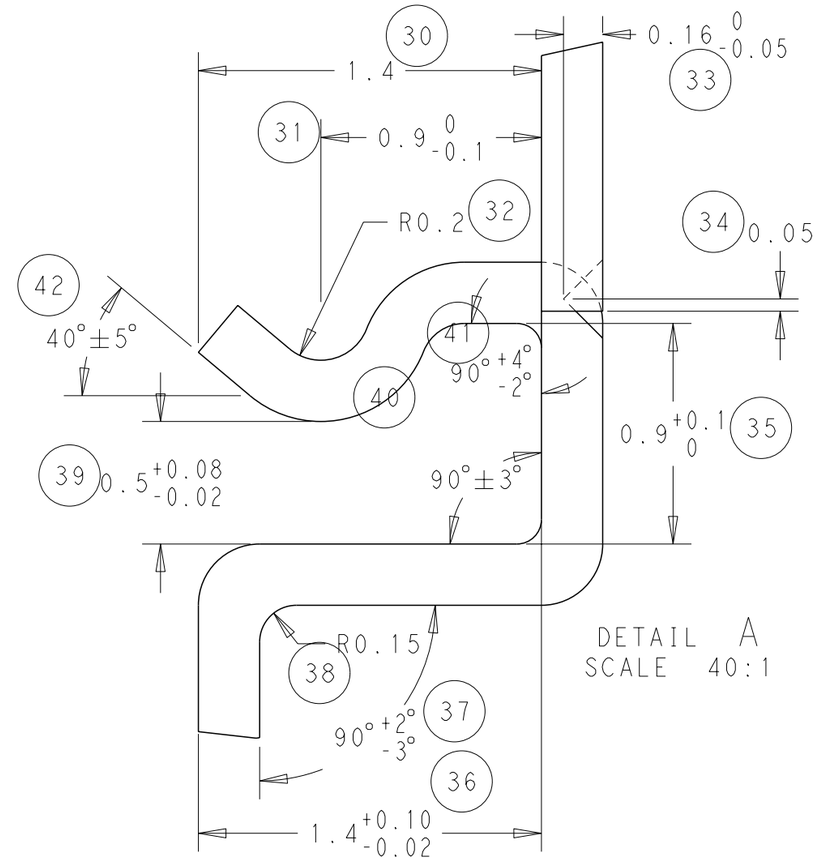

DETAIL A
SCALE 40:1

NOTE
BOWING: AFTER UPPER TIE BAR REMOVAL- 1.5mm MAX. FOR 500mm

PITCH: AFTER UPPER TIE BAR REMOVAL- 2.54±0.127

REELING	FINISH	PART NUMBER
2	Ni & Sn	1544143-4
2	Sn	1544143-3
1	Ni & Sn	1544143-2
1	Sn	1544143-1

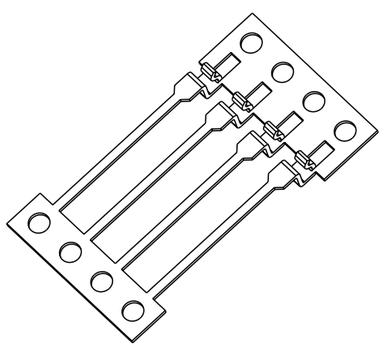

SCALE 3:1

DIL RIGHT DIRECTION	DIL LEFT DIRECTION
DIRECTION OF TOP OF REEL	DIRECTION OF TOP OF REEL
DIRECTION "1"	DIRECTION "2"

THIS DRAWING IS A CONTROLLED DOCUMENT.

DIMENSIONS: mm

TOLERANCES UNLESS OTHERWISE SPECIFIED:

0 PLC	±-
1 PLC	±-
2 PLC	±0.05
3 PLC	±-
4 PLC	±-
ANGLES	±0.5

MATERIAL SEE ABOVE. FINISH - .

DWN J.BRIGHT 12/09/11
CHK M.GREENER 12/09/11
APVD D.PENNINGTON 12/09/11
PRODUCT SPEC -
APPLICATION SPEC -
WEIGHT -

TE Connectivity

NAME DIL CONTACT
-
-

SIZE	CAGE CODE	DRAWING NO	RESTRICTED TO
A3	00779	C-1544143	-

CUSTOMER DRAWING SCALE NTS SHEET 1 OF 1 REV H

1470-19 (3/11)

Pro/ENGINEER DRAWING