Chipsmall Limited consists of a professional team with an average of over 10 year of expertise in the distribution of electronic components. Based in Hongkong, we have already established firm and mutual-benefit business relationships with customers from,Europe,America and south Asia,supplying obsolete and hard-to-find components to meet their specific needs.

With the principle of “Quality Parts,Customers Priority,Honest Operation,and Considerate Service”,our business mainly focus on the distribution of electronic components. Line cards we deal with include Microchip,ALPS,ROHM,Xilinx,Pulse,ON,Everlight and Freescale. Main products comprise IC,Modules,Potentiometer,IC Socket,Relay,Connector.Our parts cover such applications as commercial,industrial, and automotives areas.

We are looking forward to setting up business relationship with you and hope to provide you with the best service and solution. Let us make a better world for our industry!

Contact us

Tel: +86-755-8981 8866 Fax: +86-755-8427 6832
Email & Skype: info@chipsmall.com Web: www.chipsmall.com
Address: A1208, Overseas Decoration Building, #122 Zhenhua RD., Futian, Shenzhen, China

Aenderungsstand / Revision level		Beschreibung der Aenderung/ Revision Record	Geaendert Changed	Datum Date	Geprueft Approved	Datum Date
Solid / part	Zeichnung / drawing					
0	1	Lieferzustand hinzu	Steiner	31.03.03	Spiesz	31.03.03

Aufnahme fuer Schweissbolzen Ø / intended for welded stud Ø

Abbindefestigkeit [N] min./ Tensile strength [N] min.

Loch Ø / Hole size

6,5 - 7,0 mm

Blechdicke / Panel thickness

0,75 - 1,5 mm

Buendel Ø /Bundle Diameter

Werkstoff / Material

PA 6.6 hitzestabilisiert/
PA 6.6 heatstabilized,
schlagzaeh/impact resistant
schwarz/black

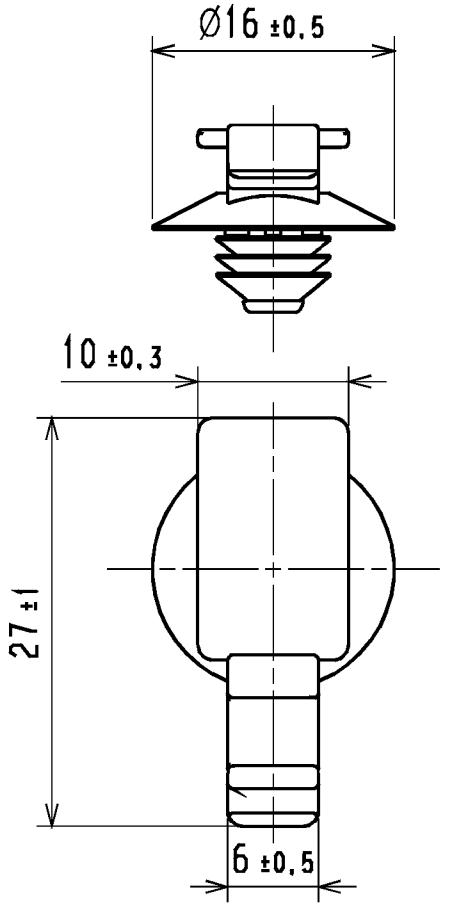

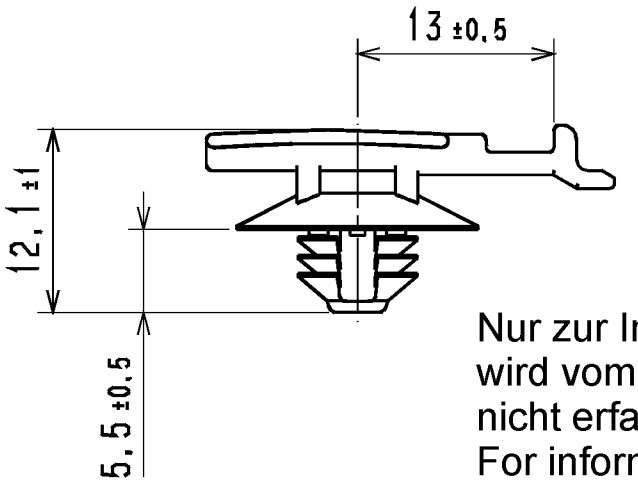

Nur zur Information,
wird vom Änderungsdienst
nicht erfaßt.
For information only,
not subject to alteration service.

LIEFERZUSTAND/ DELIVERRY CONDITION
1:1

1

Wahlweise Fuss um 180° gedreht
Optional socket turned 180°

1:1

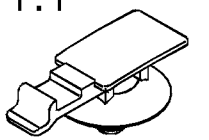

Toleranzen / Tolerances

Masse ohne Toleranzangaben nach Dimension without tolerances details to

DIN 16901 /

AUSFUERUHRUNG / PERFORMANCE
SPEZIFIKATION / SPEC.

CATIA 4.2.4

Gez. / Drawn	22.01.03	Mueller
Gepr. / Appr.	22.01.03	Spiesz

Weitergabe sowie Vervielfaeltigung dieser Unterlage, Verwertung und Mitteilung ihres Inhalts nicht gestattet, soweit nicht ausdruecklich zugestanden. Zuwiderhandlungen verpflichten zu Schadenersatz. Alle Rechte fuer den Fall der Patenterteilung oder Gebrauchsmuster-Eintragung vorbehalten.

The copyright of this drawing is reserved by HELLERMANNTYTON GMBH. It is issued on condition that it is not reproduced, copied or disclosed to a third party, either wholly or in part, without the consent of HELLERMANNTYTON GMBH.

HellermannTyton
HellermannTyton GmbH
Grosser Moorweg 45, 25436 Tornesch
Telefon: 04122 / 701-1
Telefax: 04122 / 701-400

Maszstab / Scale 2:1; 1:1

NT 381/02

Benennung / Title

FT6S WITH CONNECTOR CLIP

Zeichnungs-Nr./Drawing-No

14. 1640

Format D.Size A4

Blatt Sheet