Chipsmall Limited consists of a professional team with an average of over 10 year of expertise in the distribution of electronic components. Based in Hongkong, we have already established firm and mutual-benefit business relationships with customers from,Europe,America and south Asia,supplying obsolete and hard-to-find components to meet their specific needs.

With the principle of “Quality Parts,Customers Priority,Honest Operation,and Considerate Service”,our business mainly focus on the distribution of electronic components. Line cards we deal with include Microchip,ALPS,ROHM,Xilinx,Pulse,ON,Everlight and Freescale. Main products comprise IC,Modules,Potentiometer,IC Socket,Relay,Connector.Our parts cover such applications as commercial,industrial, and automotives areas.

We are looking forward to setting up business relationship with you and hope to provide you with the best service and solution. Let us make a better world for our industry!

Contact us

Tel: +86-755-8981 8866 Fax: +86-755-8427 6832
Email & Skype: info@chipsmall.com Web: www.chipsmall.com
Address: A1208, Overseas Decoration Building, #122 Zhenhua RD., Futian, Shenzhen, China

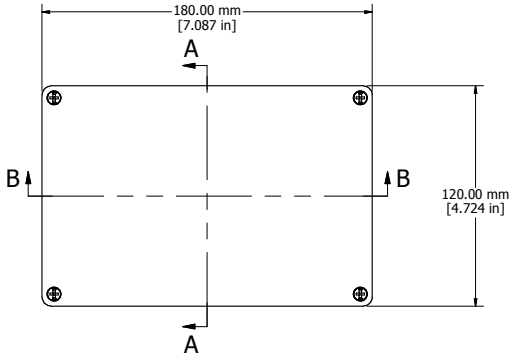

ASSEMBLY

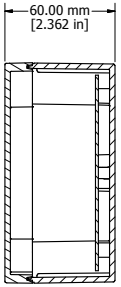

SECTION A-A

File #E65324
NEMA 4, 4X

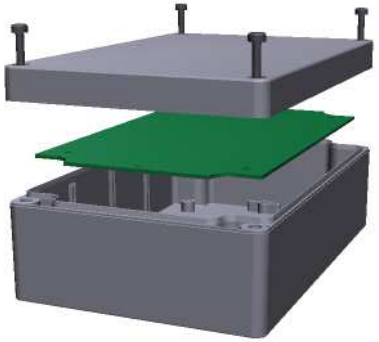

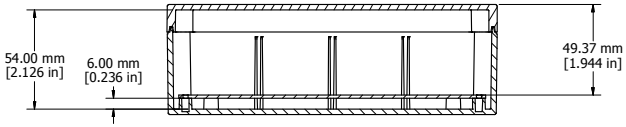

SECTION B-B

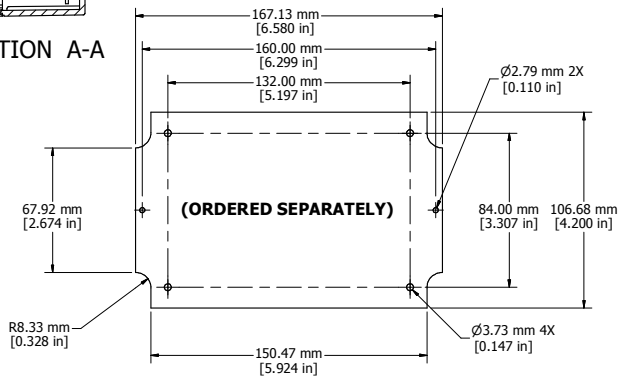

STEEL INNER PANEL

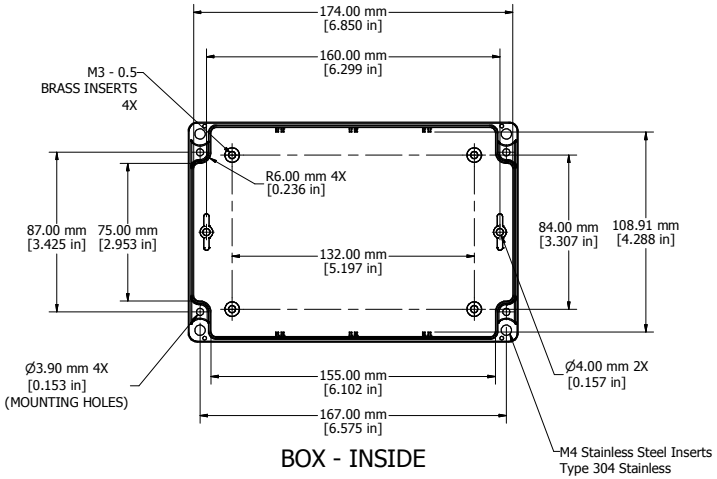

BOX - INSIDE

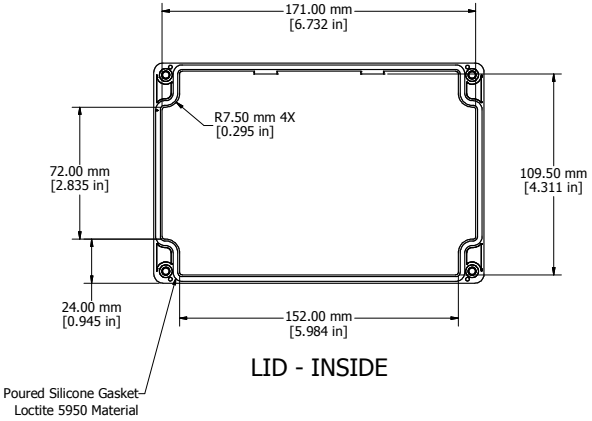

LID - INSIDE

Enclosures can be Factory Modified (Milling, Drilling, Printing etc.)
Contact mjm@hammondmfg.com for Quotes
Solid models of this enclosure available in STEP or IGES see web.

NOTE
Purchased assembly includes box, lid, and 4 cover screws
Recommended Cover screw torque -- 2.5 lbf-in (30 cN-m)
Polycarbonate version is UL 508 approved Matl UL94 - V0 / 5VA @ 3mm

1554H	
1554H Regular Enclosure	
General Purpose ABS RAL-7035	1554HGY
Polycarbonate RAL-7035	1554H2GY
1554H Clear / Smoke Lid Enclosure	
Polycarbonate Box / Clear Polycarbonate Lid	1554H2GYCL
Polycarbonate Box / Smoke Polycarbonate Lid	1554H2GYSL
ACCESSORIES	
Heavy Duty 16 Gauge Galvanized Steel Panels	1554HPL
Steel Panel / P.C. Board Machine Screw [M3 x 8mm Nickel Plated]	1591MM100
Steel Panel / P.C. Board Self Tapping Screw [#6 X 1/4" (6.4mm) Nickel Plated]	1598ATS100
Cover Screws (Pkg 4) [M4 X 20mm Type 304 Stainless Steel]	SC1554

HAMMOND MANUFACTURING™

1554H

www.hammondmfg.com