Chipsmall Limited consists of a professional team with an average of over 10 year of expertise in the distribution of electronic components. Based in Hongkong, we have already established firm and mutual-benefit business relationships with customers from,Europe,America and south Asia,supplying obsolete and hard-to-find components to meet their specific needs.

With the principle of “Quality Parts,Customers Priority,Honest Operation,and Considerate Service”,our business mainly focus on the distribution of electronic components. Line cards we deal with include Microchip,ALPS,ROHM,Xilinx,Pulse,ON,Everlight and Freescale. Main products comprise IC,Modules,Potentiometer,IC Socket,Relay,Connector.Our parts cover such applications as commercial,industrial, and automotives areas.

We are looking forward to setting up business relationship with you and hope to provide you with the best service and solution. Let us make a better world for our industry!

Contact us

Tel: +86-755-8981 8866 Fax: +86-755-8427 6832
Email & Skype: info@chipsmall.com Web: www.chipsmall.com
Address: A1208, Overseas Decoration Building, #122 Zhenhua RD., Futian, Shenzhen, China

THIS DRAWING IS UNPUBLISHED. RELEASED FOR PUBLICATION -,- .
© COPYRIGHT - BY TYCO ELECTRONICS CORPORATION. ALL RIGHTS RESERVED.

LOC	DIST
—	—

REVISIONS

P	LTR	DESCRIPTION	DATE	DWN	APVD
	A1	ECO-06-5985	14MAR06	MB	MS

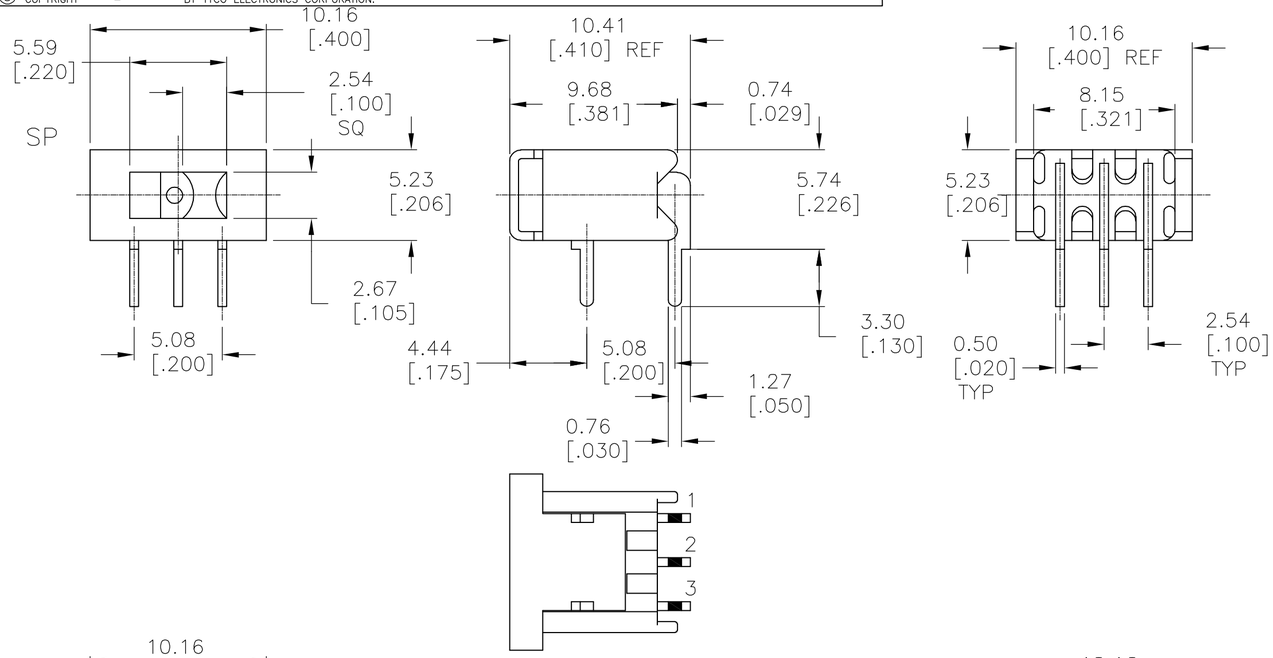

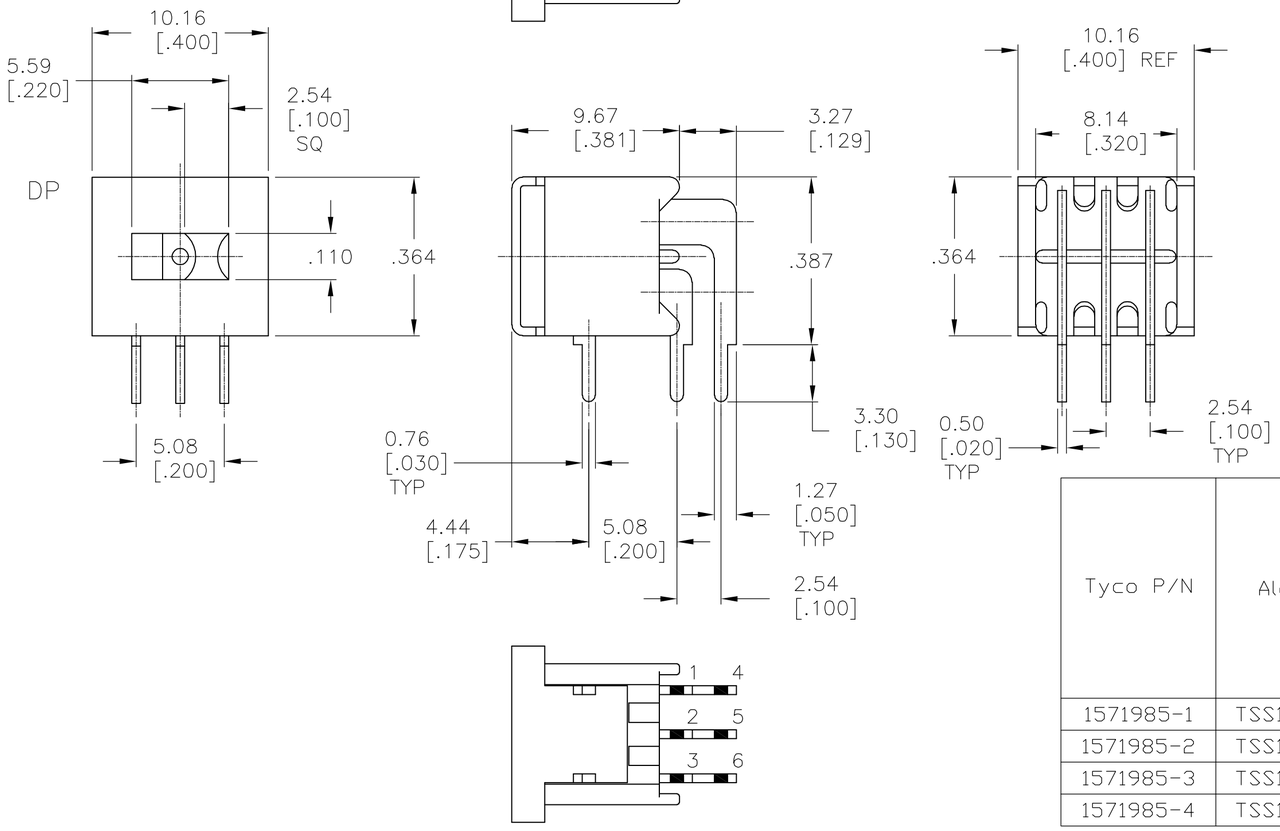

SPECIFICATIONS:
MATERIALS:
CASE–HIGH TEMPERATURE POLYESTER, BLACK
ACTUATOR–POLYESTER, UL94V–0, BLACK
FRAME– STEEL, TIN PLATE
MOVING CONTACT–COPPER ALLOY, GOLD OVER NICKEL PLATE
FIXED CONTACT–COPPER ALLOY, GOLD OVER NICKEL PLATE
TERMINAL–COPPER ALLOY, TIN OVER NICKEL PLATE

ELECTRICAL:
CURRENT RATING: 0.4 VA MAX. 20 V MAX. (AC/DC).
INITIAL CONTACT RESISTANCE: 40 MILLIOHMS MAX.
INSULATION RESISTANCE: OVER 1,000 MEGOHMS @ 500 VDC.
DIELECTRIC STRENGTH: 1,000 VAC RMS @ SEA LEVEL.
LIFE EXPECTANCY: 60,000–80,000 CYCLES

MECHANICAL:
ACTUATION FORCE 150–600 GRAMS

ENVIRONMENTAL:
OPERATING TEMPERATURE: –4°F TO +176°F(–20°C TO +80°C)
STORAGE TEMPERATURE: –4°F TO +176°F(–20°C TO +80°C)
SOLDER HEAT RESISTANCE PER EIA–364–56A, PROCEDURE 3, COND. B
SOLDERABILITY PER EID 364–52, CLASS 2 CATEGORY 1

1. ALL MATERIALS AND FINISHES SHALL COMPLY WITH EU DIRECTIVE 2002/95/EC OF 27JAN2003 (ROHS).

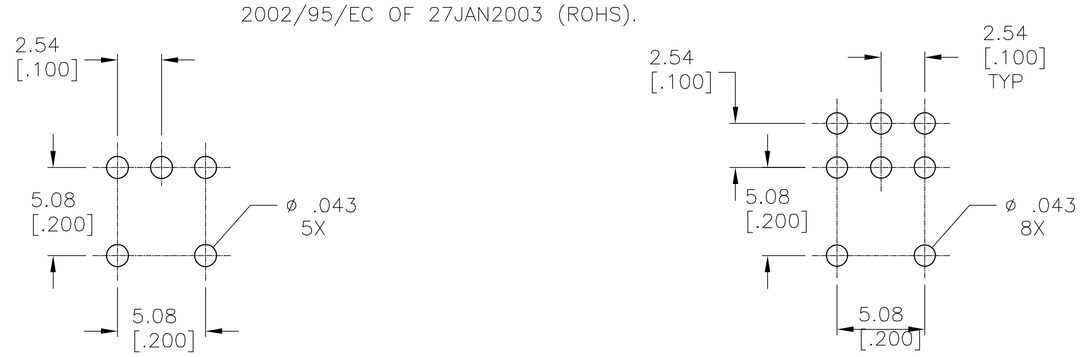

RECOMMENDED HOLE LAYOUT
LAYOUT TOLERANCES ±0.05[.002]

Tyco P/N	Alco P/N	Actuator Flush/ Extended	Position	Type	1 2 3 / 4 5 6	1 2 3 / 4 5 6	1 2 3 / 4 5 6
1571985-1	TSS11DG1RA04	Flush	2	SPDT	1,2	None	2,3
1571985-2	TSS11EG1RA04	Flush	3	SPDT	1,2	Off	2,3
1571985-3	TSS11NG1RA04	Flush	2	DPDT	1-2, 4-5	None	2-3, 5-6
1571985-4	TSS11PG1RA04	Flush	3	DPDT	1-2, 4-5	Off	2-3, 5-6

THIS DRAWING IS A CONTROLLED DOCUMENT.

DIMENSIONS: INCHES

TOLERANCES UNLESS OTHERWISE SPECIFIED:
0 PLC ± –
1 PLC ± –
2 PLC ± –
3 PLC ± 0.25[.010]
4 PLC ± –
ANGLES ± 1

MATERIAL: SEE SPECIFICATIONS
FINISH: –

DWN M.BINNER 2FEB06
CHK M.SARVER –
APVD M.SARVER –
PRODUCT SPEC —
APPLICATION SPEC —
WEIGHT —

tyco Electronics
Tyco Electronics Corporation
Harrisburg, PA 17105–3608

NAME
SLIDE SWITCH
TSS11DGRA & TSS11EGRA SP RA FLUSH SLIDER
—

SIZE	CAGE CODE	DRAWING NO	RESTRICTED TO
A2	00779	C-1571985	—

CUSTOMER DRAWING | SCALE 1:1 | SHEET 1 OF 1 | REV A1

1571985