Chipsmall Limited consists of a professional team with an average of over 10 year of expertise in the distribution of electronic components. Based in Hongkong, we have already established firm and mutual-benefit business relationships with customers from,Europe,America and south Asia,supplying obsolete and hard-to-find components to meet their specific needs.

With the principle of “Quality Parts,Customers Priority,Honest Operation,and Considerate Service”,our business mainly focus on the distribution of electronic components. Line cards we deal with include Microchip,ALPS,ROHM,Xilinx,Pulse,ON,Everlight and Freescale. Main products comprise IC,Modules,Potentiometer,IC Socket,Relay,Connector.Our parts cover such applications as commercial,industrial, and automotives areas.

We are looking forward to setting up business relationship with you and hope to provide you with the best service and solution. Let us make a better world for our industry!

# Contact us

Tel: +86-755-8981 8866 Fax: +86-755-8427 6832
Email & Skype: info@chipsmall.com Web: www.chipsmall.com
Address: A1208, Overseas Decoration Building, #122 Zhenhua RD., Futian, Shenzhen, China

図面番号(DRAWING NO.) SJ105473

| 版数 REV. | 年月日 DATE | DCN NO. | 変更内容 DESCRIPTION | 製図 DR. | 担当 CHK. | 査閲 APPD. | 承認 APPD. |
|---|---|---|---|---|---|---|---|
| | | | | | | | |
| | | | | | | | |
| | | | | | | | |

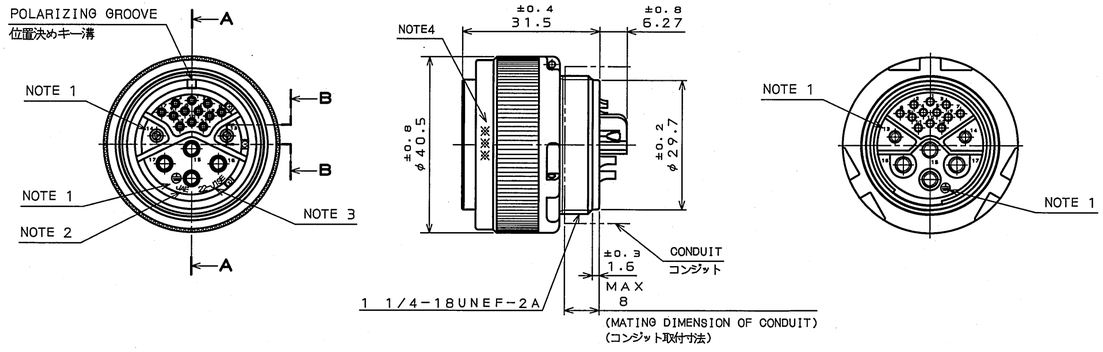


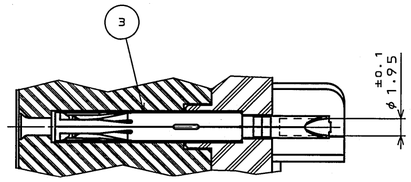


SECT. B-B
(SCALE 2:1)

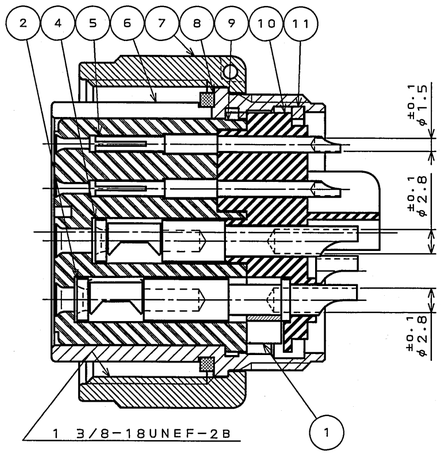


SECT. A-A
(SCALE 2:1)

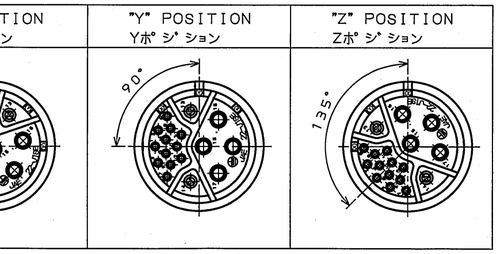


INSERT ROTATING POSITIONS
インサート回転角度
(NOTE 5)

特別管理品目
SPECIAL CONTROL ITEM
TÜV

## DESIGNATION
命名法

JL04V-6A22-J1SE※-R

- SERIES シリーズ名
- PLUG(STRAIGHT) プラグ(ストレート)
- CLASS 嵌合時嵌合部防水構造
- SHELL SIZE シェルサイズ
- CONTACT ARRANGEMENT インサート名
- SOCKET CONTACT ソケットコンタクト
- WITH PROTECTIVE EARTH CONTACT 保護回路接続構造有
- INSERT ROTATING POSITIONS インサート回転角度 NONE:NORMAL POSITION X : 45° Y : 90° Z :135°
- SUFFIX 特殊記号

NOTE 1. CONTACT POSITION NUMBER IS MARKED IN THE AREA SHOWN. EARTH MARK(⏚) IS MARKED NEAR BY EARTH CONTACT.
2. COMPANY LOGO "JAE "APPEARS IN THE AREA SHOWN.
3. CONTACT ARRANGEMENT NUMBER "22-J1SE" IS MARKED IN THE AREA SHOWN.
4. PRODUCTION LOT NUMBER ARE MARKED AS INDICATED.
※※※
MANUFACTURER MONTH( 1 ~ 9 , X , Y , Z )
(JAN.~SEP.,OCT.,NOV.,DEC.)
MANUFACTURER YEAR('05,'06,'07,・・・)
5. TO PREVENT MIS-MATING OF CONNECTOR, THERE ARE FOUR INSERT ROTATING POSITIONS AVAILABLE:NORMAL, X, Y, AND Z (POSITIONS IS DIFFERENT EACH OTHER).
NORMAL POSITION IS SHOWN IN THE FRONT VIEW.

注1. 図示の位置に端子番号を表示する。
又、保護回路接続端子は ⏚ で表わす。
2. 図示の位置に社名【JAE】を表示する。
3. 図示の位置にインサート名【22-J1SE】を表示する。
4. 図示の位置に製造ロットNo. を表示する。
※※※
製造月(1~9月,X:10月,Y:11月,Z:12月)
製造年('05,'06,'07・・・)
5. コネクタの誤嵌合防止の為、4つのインサート回転角度(互いに角度が異なる)ノーマル, X, Y, Zポジションがある。
正面図は、ノーマルポジションのものである。

## SPECIFICATION

NUMBER OF CONTACT : 12×#20 CONTACT No. 1~12
: 2×#16 CONTACT No. 13, 14
: 4×#12 CONTACT No. 15~17, ⏚

RATED VOLTAGE : 24VAC #20CONTACT
: 125VAC OR 24VAC #16CONTACT
: 250VAC #12CONTACT
POLLUTION DEGREE:3/OVER VOLTAGE CATEGORY:Ⅲ

RATED CURRENT: 5A MAX. /ONE CONTACT #20CONTACT
: 13A MAX. /ONE CONTACT #16CONTACT
: 23A MAX. /ONE CONTACT #12CONTACT

DIELECTRIC WITHSTANDING VOLTAGE : 2000VAC
EXCEPT 1000VAC BETWEEN #20 CONTACTS.

INSULATION RESISTANCE : 5000MΩ MIN. (AT 500VDC)

APPLICABLE WIRE: 0.8㎟ MAX #20CONTACT
: 1.25㎟ MAX #16CONTACT
: 3.5㎟ MAX #12CONTACT

## 仕様

コンタクト:#20コンタクト 12本(No. 1~12)
#16コンタクト 2本(No. 13, 14)
#12コンタクト 4本(No. 15~17, ⏚)
定格電圧 : 24VAC(#20コンタクト)
125VAC or 24VAC(#16コンタクト)
250VAC(#12コンタクト)
(汚染度:3/過電圧範疇:Ⅲ)
定格電流 : 5A以下/1芯(#20コンタクト)
13A以下/1芯(#16コンタクト)
23A以下/1芯(#12コンタクト)
耐電圧 :2000VAC
但し、#20コンタクト間は1000VAC
絶縁抵抗 :5000MΩ以上(DC500Vにて)
適用電線 :0.8㎟以下(#20コンタクト)
1.25㎟以下(#16コンタクト)
3.5㎟以下(#12コンタクト)

| 符号 NO. | 名称 DESCRIPTION | 個数 QTY. | 材料 MATERIAL | 仕上 FINISH | 備考 REMARKS |
|---|---|---|---|---|---|
| 11 | RETAINING RING | 1 | COPPER ALLOY | ZINC PLATING | COLOR:BLACK SYSTEM INTERFERENCE COLOR |
| 10 | REAR INSULATOR | 1 | SYNTHETIC RESIN | NONE | COLOR:BLACK |
| 9 | FRONT INSULATOR | 1 | SYNTHETIC RESIN | NONE | COLOR:BLACK |
| 8 | GASKET | 1 | SYNTHETIC RUBBER | NONE | COLOR:BLACK |
| 7 | COUPLING NUT | 1 | ALUMINUM ALLOY | ZINC PLATING | COLOR:BLACK SYSTEM INTERFERENCE COLOR |
| 6 | BARREL | 1 | ALUMINUM ALLOY | ZINC PLATING | COLOR:BLACK SYSTEM INTERFERENCE COLOR |
| 5 | #20CONTACT(LINE) | 12 | COPPER ALLOY | SILVER PLATING | CONTACT NO.:1~12 |
| 4 | #16CONTACT(LINE) | 2 | COPPER ALLOY | SILVER PLATING | CONTACT NO.:13,14 |
| 3 | #12CONTACT(LINE) | 3 | COPPER ALLOY | SILVER PLATING | CONTACT NO.:15~17 |
| 2 | #12CONTACT(EARTH) | 1 | COPPER ALLOY | SILVER PLATING | CONTACT No. ⏚ |
| 1 | EARTH LUG | 1 | COPPER ALLOY | SILVER PLATING | |

仕様書(SPECIFICATION) JACS-5080-3,T95-4
第1版(ORIGINAL DATE) 20.Dec.2005
製図 DR. T.SUZUKI
担当 CHK. T.SUZUKI
査閲 APPD. TOKAMURA
承認 APPD. A Onogawa
尺度(SCALE) 1:1
シリーズ(SERIES) JL04V
名称(TITLE) JL04V-6A22 -J1SE※-R
質量(MASS)
一般公差(GENERAL TOLERANCE)
寸法(DIMENSION): . ±0.8 / .X ±0.4 / .XX ±0.1 / .XXX±
角度(ANGLES): X° ± / XX'±
日本航空電子工業株式会社 JAPAN AVIATION ELECTRONICS INDUSTRY, LTD.
図面番号(DRAWING NO.) SJ105473
版数(REV.) 1
SIZE A2

JAE-CONNECTOR.COM
Reference Only

JAE CONNECTOR DIV. PROPRIETARY.
COPYRIGHT (C) 2005, JAPAN AVIATION ELECTRONICS INDUSTRY, LTD.

DOF-0-213F(05.08)