Chipsmall Limited consists of a professional team with an average of over 10 year of expertise in the distribution of electronic components. Based in Hongkong, we have already established firm and mutual-benefit business relationships with customers from,Europe,America and south Asia,supplying obsolete and hard-to-find components to meet their specific needs.

With the principle of “Quality Parts,Customers Priority,Honest Operation,and Considerate Service”,our business mainly focus on the distribution of electronic components. Line cards we deal with include Microchip,ALPS,ROHM,Xilinx,Pulse,ON,Everlight and Freescale. Main products comprise IC,Modules,Potentiometer,IC Socket,Relay,Connector.Our parts cover such applications as commercial,industrial, and automotives areas.

We are looking forward to setting up business relationship with you and hope to provide you with the best service and solution. Let us make a better world for our industry!

Contact us

Tel: +86-755-8981 8866 Fax: +86-755-8427 6832
Email & Skype: info@chipsmall.com Web: www.chipsmall.com
Address: A1208, Overseas Decoration Building, #122 Zhenhua RD., Futian, Shenzhen, China

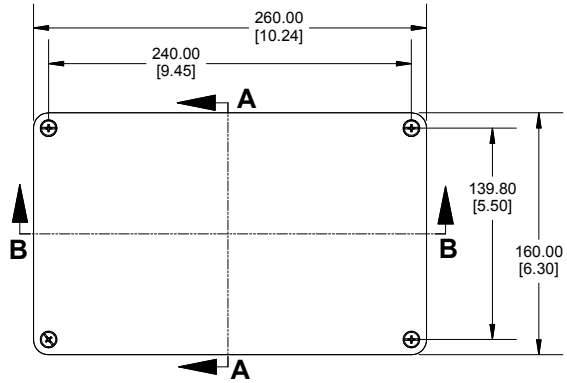

TOP VIEW

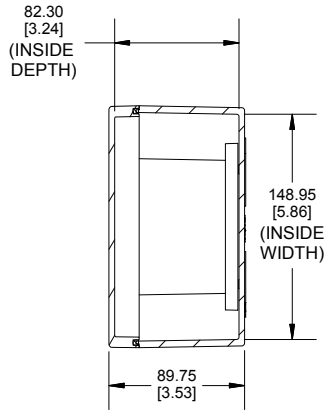

SECTION A-A
END VIEW

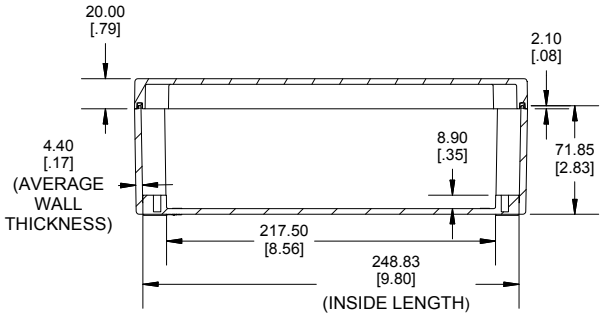

SECTION B-B
SIDE VIEW

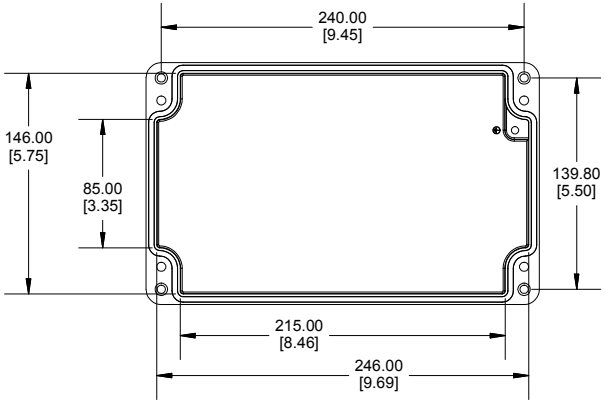

INSIDE LID

c UL US LISTED
FILE #E65324
NEMA 4, 4X, 6, 6P

Enclosures can be Factory Modified (Milling, Drilling, Printing etc.)
Contact Factory mjm@hammondmfg.com for quotes
Solid models of this enclosure available in STEP or IGES.
(Part number and text placement/orientation on our products are subject to change, we do not recommend using them as a locating reference for modification purposes)

NOTE
Purchased assembly includes box, lid, silicone gasket, 4 cover screws and 4 ground screws with washers. Box and lid are made from Diecast Aluminum Alloy.
Recommended cover screw Torque 15-17 lbf.in (150 -170 cN.m)

1590Z162	
1590Z162 Enclosure	
Natural Enclosure	1590Z162
Black Enclosure	1590Z162BK
Grey Enclosure - RAL7001 Gloss	1590Z162GY
ACCESSORIES	
Steel Inner Panel	1590Z162PL
Pre-Formed Silicone Gasket (2 Pack)	1590Z162G
Copper Ground Hardware (20 Pack) [M6 - 1.0 X 10mm / M6 Washer]	SCGM6-20
Stainless Steel Cover screws (12 pkg) [M6 - 1.0 x 35mm]	SC564-12

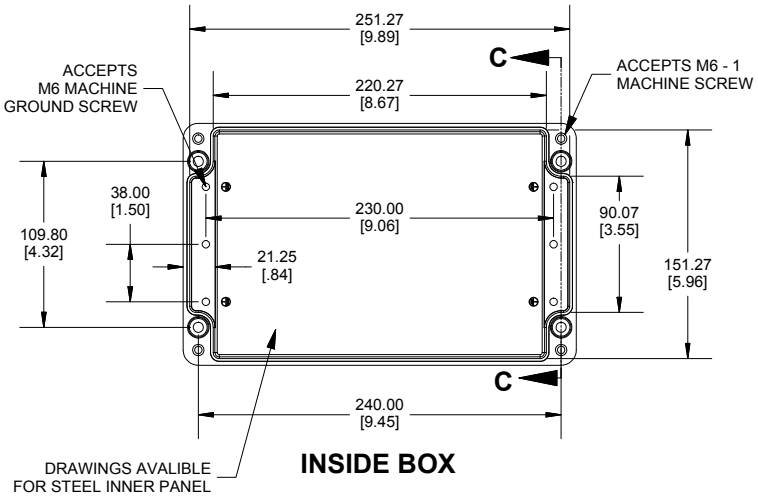

INSIDE BOX

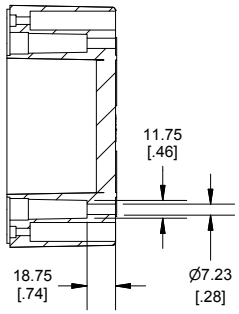

SECTION C-C
MOUNTING HOLE

Dimensions:
mm
[inches]

HAMMOND MANUFACTURING®

1590Z162

www.hammondmfg.com