Chipsmall Limited consists of a professional team with an average of over 10 year of expertise in the distribution of electronic components. Based in Hongkong, we have already established firm and mutual-benefit business relationships with customers from,Europe,America and south Asia,supplying obsolete and hard-to-find components to meet their specific needs.

With the principle of “Quality Parts,Customers Priority,Honest Operation,and Considerate Service”,our business mainly focus on the distribution of electronic components. Line cards we deal with include Microchip,ALPS,ROHM,Xilinx,Pulse,ON,Everlight and Freescale. Main products comprise IC,Modules,Potentiometer,IC Socket,Relay,Connector.Our parts cover such applications as commercial,industrial, and automotives areas.

We are looking forward to setting up business relationship with you and hope to provide you with the best service and solution. Let us make a better world for our industry!

Contact us

Tel: +86-755-8981 8866 Fax: +86-755-8427 6832
Email & Skype: info@chipsmall.com Web: www.chipsmall.com
Address: A1208, Overseas Decoration Building, #122 Zhenhua RD., Futian, Shenzhen, China

Hand Held Instrument (1593Q)

Top View of Assembly

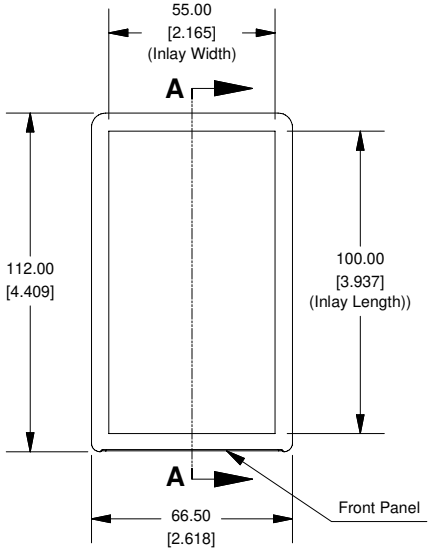

SECTION A-A
(Side View Inside Assembly)

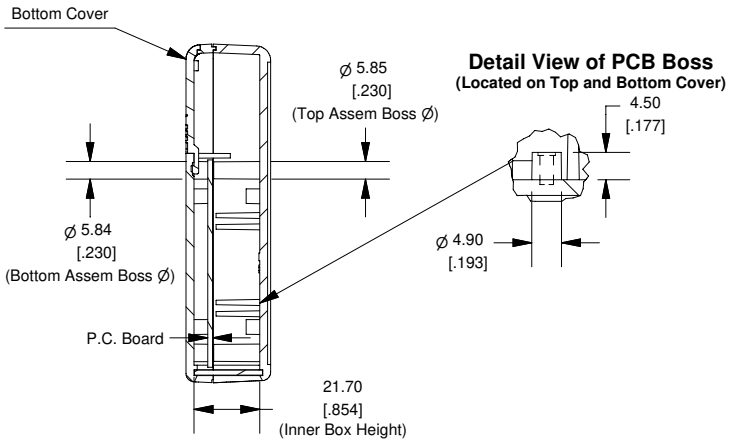

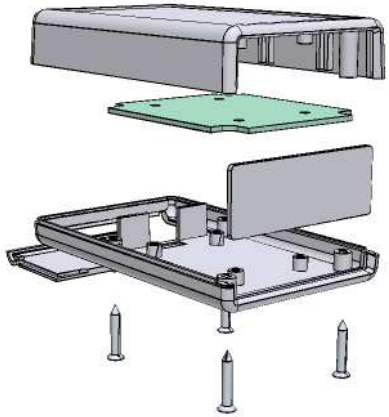

End View of Assembly

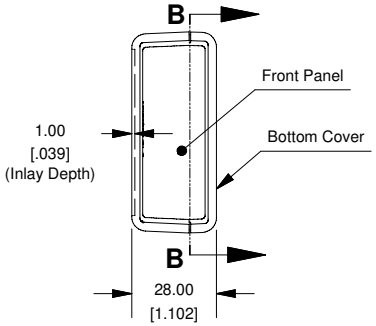

SECTION B-B
(Inside of Bottom Cover)

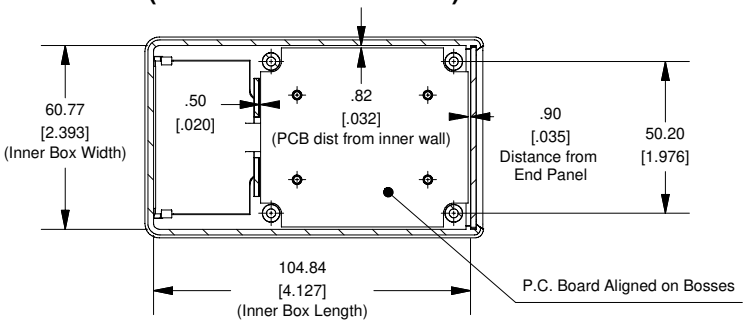

Enclosures can be Factory Modified (Milling, Drilling, Printing etc.)
Solid models of this enclosure available in STEP or IGES.
Contact Factory mjm@hammondmfg.com

NOTE
Enclosure molded from GP ABS (UL94-HB) plastic.
Purchased assembly includes top and bottom cover, front panel (plastic), battery door and 4 cover screws.

Front/Rear Panel
(Dashed Line Indicates Viewing Area)

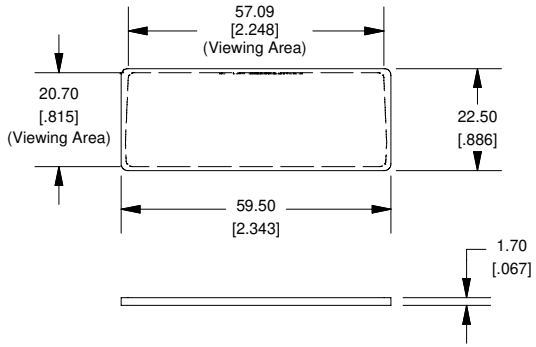

Maximum P.C. Board Size

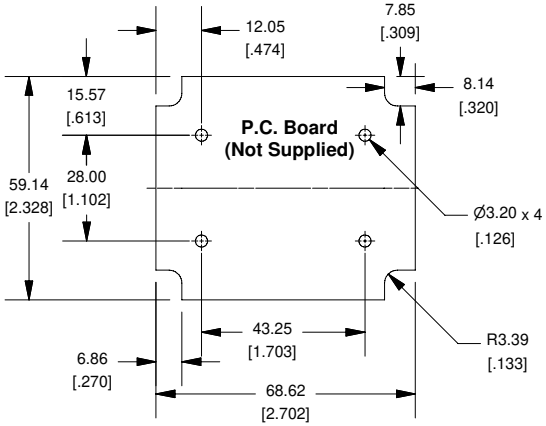

PART NUMBERS	
1593Q Enclosure	
Black Enclosure	1593QBK
Grey Enclosure	1593QGY
ACCESSORIES	
Cover Screws (Pkg 100) [#4 x 3/4" self-tapping oval head (19.1mm)]	1593QS100 (Silver) 1593QS100BK (Black)
P.C. Board Screws [#4 x 1/4" self-tapping (6.4mm)]	1593ATS50 (Pkg 50) 1593ATS100 (Pkg 100)
Belt or Pocket Clip	1599CLIP (Black) 1599CLIPGY (Grey)
Infrared Panels (Pkg 10)	1593DIR10

HAMMOND MANUFACTURING™

1593Q

www.hammondmfg.com