Chipsmall Limited consists of a professional team with an average of over 10 year of expertise in the distribution of electronic components. Based in Hongkong, we have already established firm and mutual-benefit business relationships with customers from,Europe,America and south Asia,supplying obsolete and hard-to-find components to meet their specific needs.

With the principle of “Quality Parts,Customers Priority,Honest Operation,and Considerate Service”,our business mainly focus on the distribution of electronic components. Line cards we deal with include Microchip,ALPS,ROHM,Xilinx,Pulse,ON,Everlight and Freescale. Main products comprise IC,Modules,Potentiometer,IC Socket,Relay,Connector.Our parts cover such applications as commercial,industrial, and automotives areas.

We are looking forward to setting up business relationship with you and hope to provide you with the best service and solution. Let us make a better world for our industry!

Contact us

Tel: +86-755-8981 8866 Fax: +86-755-8427 6832
Email & Skype: info@chipsmall.com Web: www.chipsmall.com
Address: A1208, Overseas Decoration Building, #122 Zhenhua RD., Futian, Shenzhen, China

DWG. SIZE	DWG. NO.
D	031–1810

REVISIONS

SYM.	E.C.N.	DATE	APVD.
A	24194	3/20/00	
	DELETED BLIND HOLES		

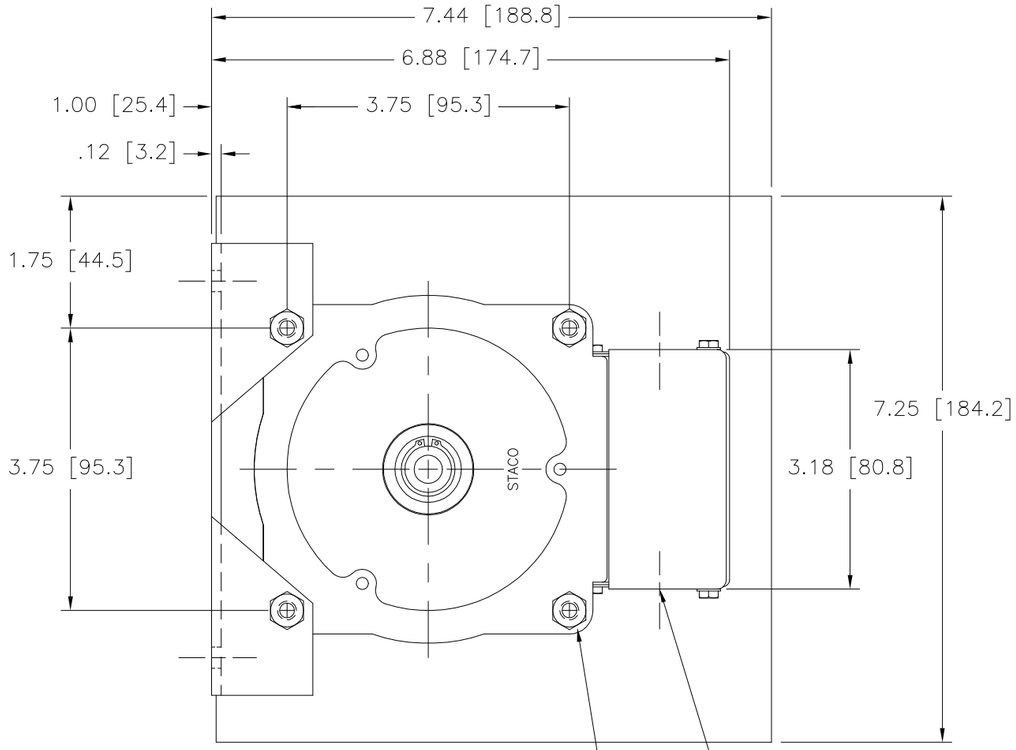

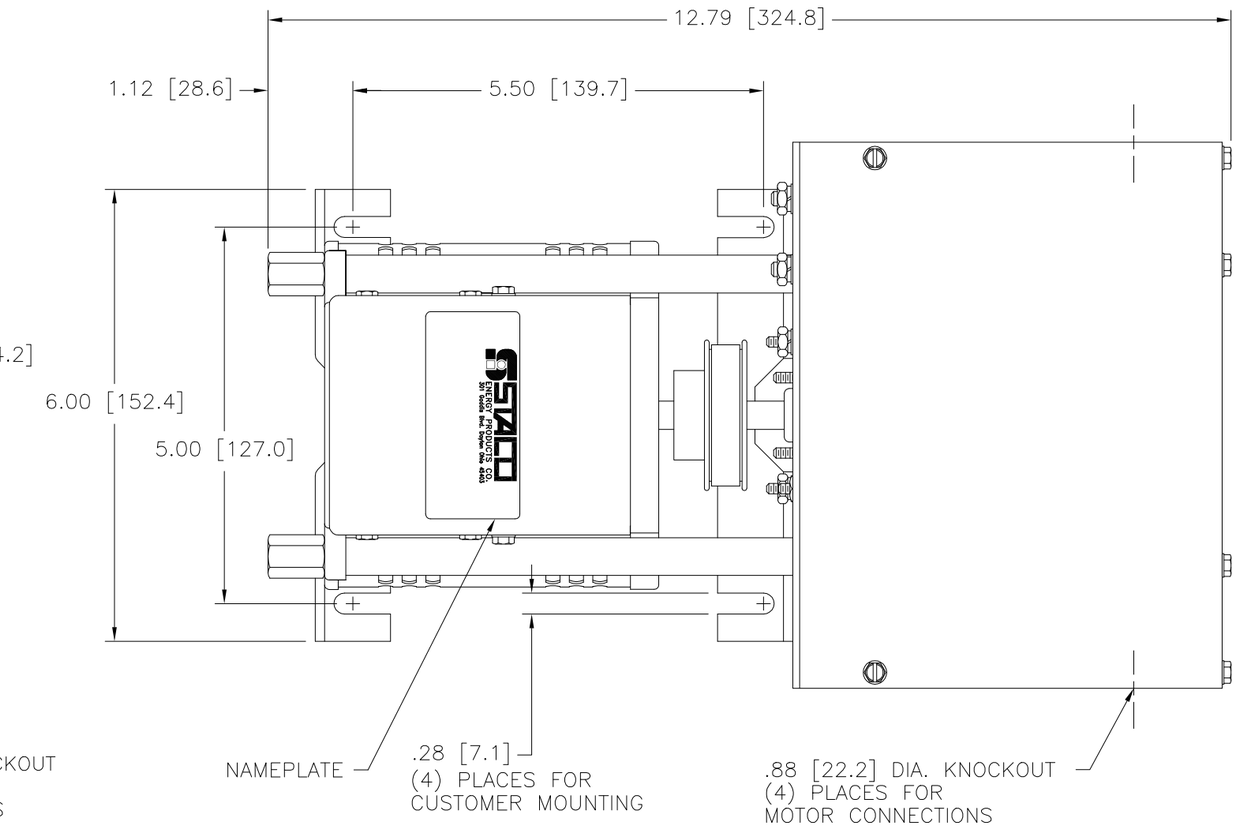

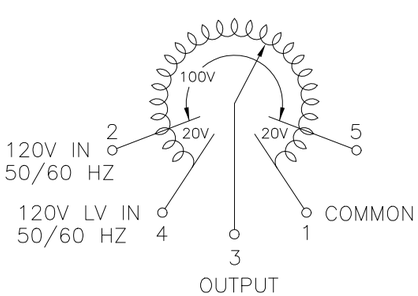

COIL SCHEMATIC
AS VIEWED FROM BASE END
FUSE RECOMMENDED BUT
NOT SUPPLIED

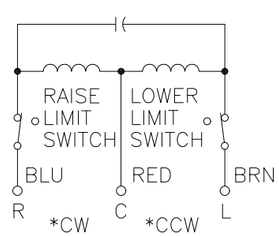

MOTOR CIRCUIT
120V, 50/60 HZ
* ROTATION AS VIEWED
FROM MOTOR END
MOTOR SPEED: SEE CHART

+ MOTOR DRIVEN UNITS USE TERMINAL CONNECTIONS FOR CCW INCREASING VOLTAGE, AS VIEWED FROM BASE END.

SPECIFICATIONS

WIRING	INPUT VOLTS	INPUT HERTZ	OUTPUT VOLTS	CONSTANT CURRENT LOAD MAX. AMPS	CONSTANT CURRENT LOAD MAX. KVA	CONSTANT IMPEDANCE LOAD MAX. AMPS	CONSTANT IMPEDANCE LOAD MAX. KVA	SHAFT ROTATION TO INCREASE VOLTAGE	TERMINAL CONNECTIONS FOR INCREASING VOLTAGE AS VIEWED FROM BASE END + INPUT	JUMPER	OUTPUT
SINGLE PHASE	120	50/60	0–120	10	1.2	13	1.56	CW	1–4	——	4–3
								CCW	1–4	——	1–3
			0–140	10	1.4	——	——	CW	4–5	——	4–3
								CCW	2–1	——	1–3

SPEED (SECONDS)	MODEL NUMBER
5	5M1010BCT
15	15M1010BCT
30	30M1010BCT
60	60M1010BCT

UNLESS OTHERWISE SPECIFIED. TOLERANCE IS ±
DECIMALS .XX .06 .XXX .005 HOLES .002 ANGLES 1° DRAFT 1–1/2°

UNITS IN [mm]

MATERIAL :

ALL DIMENSIONS APPLY AFTER PLATING

The information and design disclosed herein was originated by and is the property of STACO ENERGY PRODUCTS CO., which reserves all patent, proprietary, design, manufacturing, reproduction, use and sale rights thereto, and to any article disclosed therein except to the extent rights are expressly granted to others. The foregoing does not apply to vendor proprietary parts.

TITLE: SPEC. CONTROL DRAWING
MOTORIZED VARIABLE XFMR.
MODEL: M1010BCT

STACO ENERGY PRODUCTS CO.
A COMPONENTS CORPORATION OF AMERICA COMPANY
DAYTON, OHIO U.S.A.

DRAWN BY	DATE	FIRST USED ON	DO NOT SCALE DWG.	CUSTOMER APPROVAL	DATE
S.A. SMITH	9/22/97				
CHECKER	DATE	WEIGHT APPROX. 16.75 LBS	CODE IDENT. NO. 83008	DWG. SIZE D	DWG. NO. 031–1810
ENGINEER	DATE	SCALE 1=1	SHEET 1 OF 1		