Chipsmall Limited consists of a professional team with an average of over 10 year of expertise in the distribution of electronic components. Based in Hongkong, we have already established firm and mutual-benefit business relationships with customers from,Europe,America and south Asia,supplying obsolete and hard-to-find components to meet their specific needs.

With the principle of “Quality Parts,Customers Priority,Honest Operation,and Considerate Service”,our business mainly focus on the distribution of electronic components. Line cards we deal with include Microchip,ALPS,ROHM,Xilinx,Pulse,ON,Everlight and Freescale. Main products comprise IC,Modules,Potentiometer,IC Socket,Relay,Connector.Our parts cover such applications as commercial,industrial, and automotives areas.

We are looking forward to setting up business relationship with you and hope to provide you with the best service and solution. Let us make a better world for our industry!

Contact us

Tel: +86-755-8981 8866 Fax: +86-755-8427 6832
Email & Skype: info@chipsmall.com Web: www.chipsmall.com
Address: A1208, Overseas Decoration Building, #122 Zhenhua RD., Futian, Shenzhen, China

DO NOT SCALE	METRIC	THIRD ANGLE PROJECTION
DIMENSIONS IN mm		

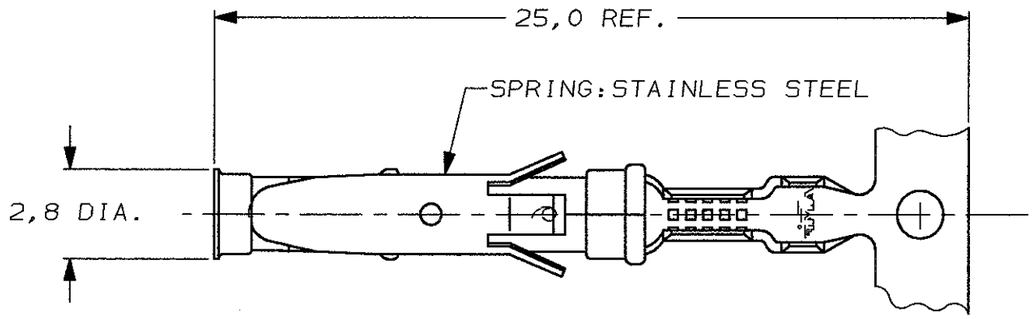

STRIP

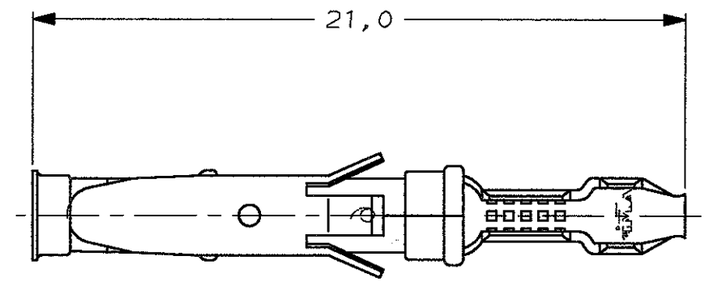

LOOSE-PIECE

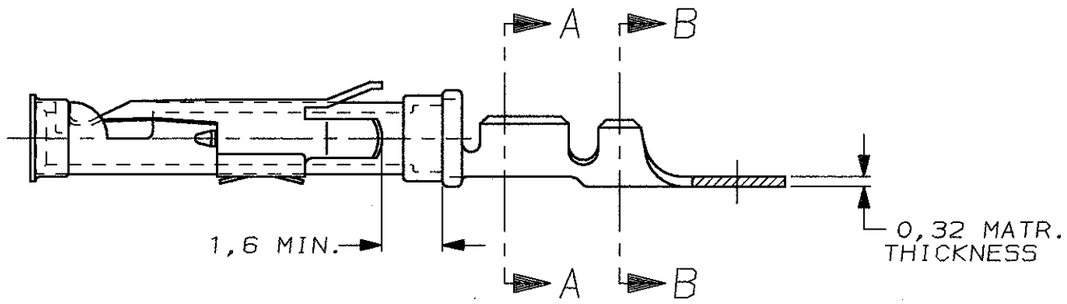

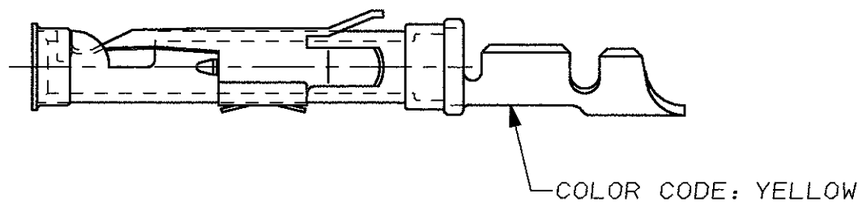

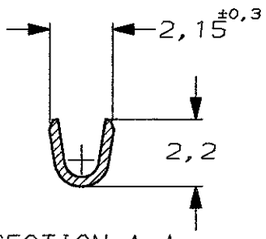

SECTION A-A

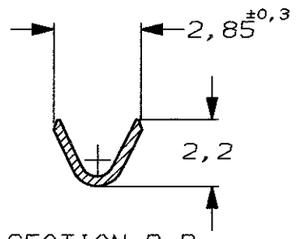

SECTION B-B

	1-163087-5	A	6 ~~1-163088-4~~	BRASS	SILVER 28
	1-163087-4	A	6 ~~1-163088-4~~	BRASS	EL.TIN 31 20
5 OBSOLETE	~~1-163087-3~~	A	6 ~~1-163088-3~~	BRASS	BR. TIN/LEAD 30
	~~5-163087-3~~ 4	C		BRASS	ECON.GOLD 21
	5-163087-2 1 4	C		BRASS	SEL.GOLD 22
5 OBSOLETE	~~5-163087-1~~ 1 4	C		BRASS	EL.TIN 20
	1-163087-2	B	6 1-163088-1	BRASS	GOLD 23
	1-163087-1	A		BRASS	ECON.GOLD 21
	1-163087-0	B	1-163088-0	BRASS	ECON.GOLD 21
	163087-9	A		BRASS	EL.TIN 20
	163087-8	A		BRASS	SEL.GOLD 22
	163087-2 1	B	163088-2	BRASS	SEL.GOLD 22
	163087-1 1	B	163088-1	BRASS	EL.TIN 20
	PARTNUMBER	DIRECTION OF REEL	LOOSE-PIECE	MATERIAL	PLATING

DIRECTION OFF TOP OF REEL

AMPOMATOR + MINI-APPL. 107-3-FIG.1 A

107-3-FIG.2 B

107-3-FIG.4 C

WIRE RANGE : 0,20-0,50 mm² (24-20 AWG)
INSUL. RANGE : 1,1 -1,8 mm (.045-.070)

NOTES :

1. U.L.RECONIZED UNDER FILE E28476 VOL.VI SEC.I
2. FOR CRIMPDETAILS SEE AMP-SPEC. 114-19.000 .
3. MEETS PRODUCTSPECIFICATION 108-10042.
4. SPECIAL REEL WITH 200 PCS FOR REEL-FED HAND-TOOL
5. **OBSOLETE PARTS: OBSOLETE CIS STREAMLINING PER D.RENAUD/D.SINISI**
6. **OBSOLETE**

NOTES	MATERIAL	THICKNESS	AREA
20	TIN	2,0 µm	ALL OVER
21	NICKEL GOLD TIN/LEAD	0,8 µm	ALL OVER CONTACT AREA BARREL
22	NICKEL GOLD GOLD	0,8 µm	ALL OVER CONTACT AREA ALL OVER
23	NICKEL GOLD GOLD	1,2 µm	ALL OVER CONTACT AREA ALL OVER
27	NICKEL SILVER TIN/LEAD	2,5 µm	ALL OVER CONTACT AREA BARREL
28	SILVER NICKEL	1,5-2,5 µm 0,76 µm	ALL OVER ALL OVER
29	SILVER	2,5 µm	ALL OVER
30	NICKEL BRGHT TIN/LEAD	1,27 µm 1,27 µm	ALL OVER ALL OVER
31	LUBRICATED		

LTR.	REVISION RECORD	DR.	CHK.	DATE
AD2	REVISED PER ECO-11-005140	RK	HMR	3MAY11

DR.: - CHK.: - APP.: -
DATE: - DATE: - DATE: -

CUSTOMER DRAWING — FOR REFERENCE ONLY WILL NOT BE UPDATED

THIS DRAWING IS UNPUBLISHED
~~RELEASED FOR PUBLICATION ,19~~

TE Connectivity

NAME
SOCKET TYPE III CONTACT
SIZE 16

DWG.No. 163087 | REV.LTR. AD2 | SHEET 1 OF 1 | A3

R6-128 (REV.04-91)