Chipsmall Limited consists of a professional team with an average of over 10 year of expertise in the distribution of electronic components. Based in Hongkong, we have already established firm and mutual-benefit business relationships with customers from,Europe,America and south Asia,supplying obsolete and hard-to-find components to meet their specific needs.

With the principle of “Quality Parts,Customers Priority,Honest Operation,and Considerate Service”,our business mainly focus on the distribution of electronic components. Line cards we deal with include Microchip,ALPS,ROHM,Xilinx,Pulse,ON,Everlight and Freescale. Main products comprise IC,Modules,Potentiometer,IC Socket,Relay,Connector.Our parts cover such applications as commercial,industrial, and automotives areas.

We are looking forward to setting up business relationship with you and hope to provide you with the best service and solution. Let us make a better world for our industry!

Contact us

Tel: +86-755-8981 8866 Fax: +86-755-8427 6832
Email & Skype: info@chipsmall.com Web: www.chipsmall.com
Address: A1208, Overseas Decoration Building, #122 Zhenhua RD., Futian, Shenzhen, China

DRAWING MADE IN AMERICAN PROJECTION

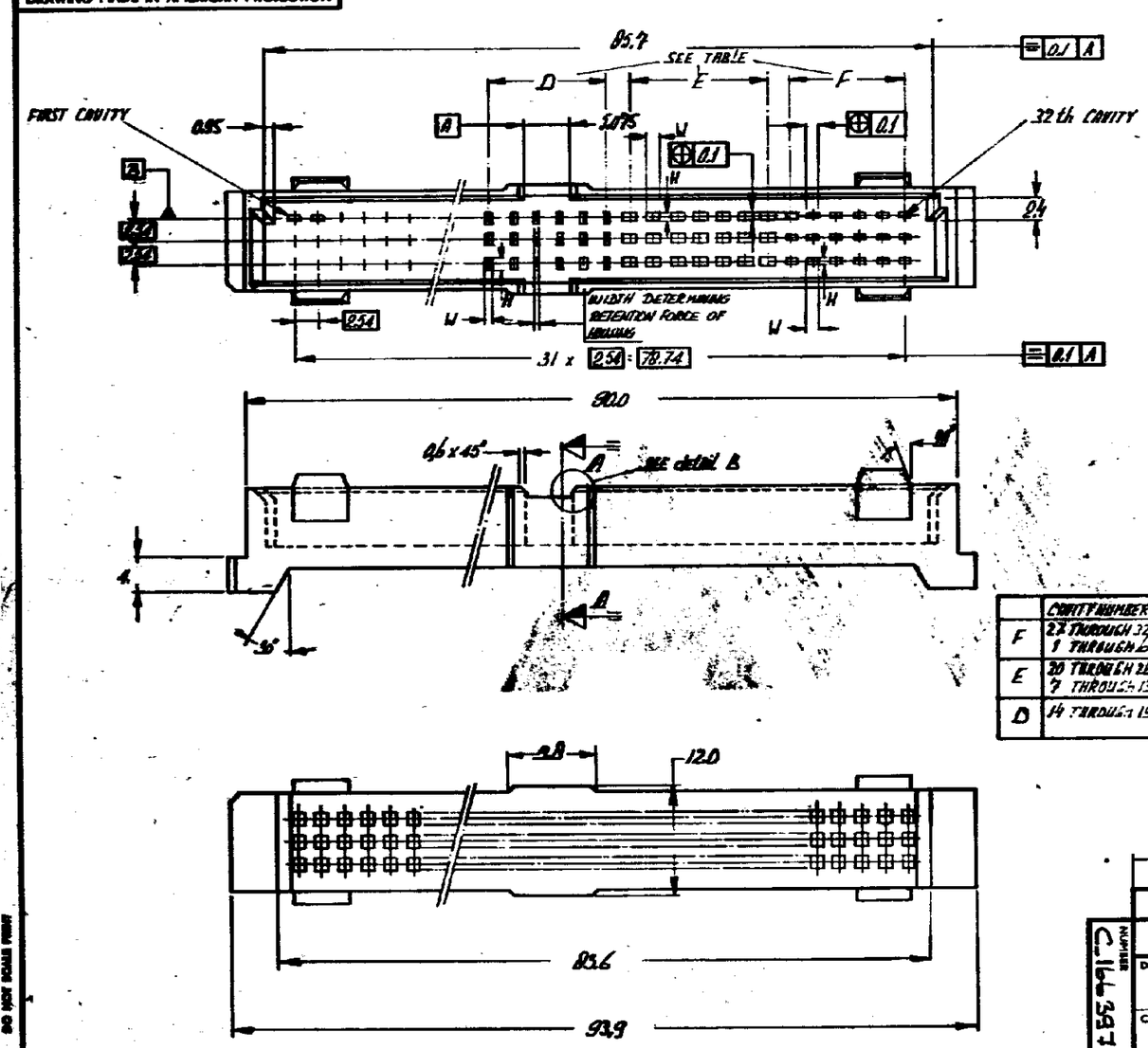

	CAVITY NUMBER	H	W
F	22 THROUGH 32 1 THROUGH 6	0.65	0.70
E	20 THROUGH 26 7 THROUGH 13	0.66	0.75
D	14 THROUGH 19	0.69	0.59

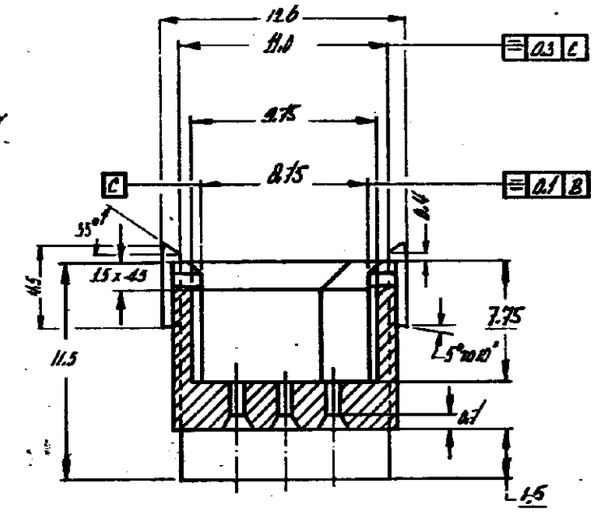

Section A-A

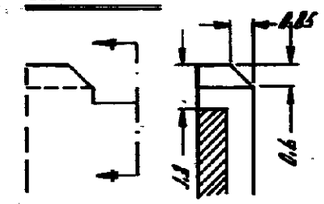

ENLARGED VIEW OF DETAIL B

166397.1	Thermo plastic polyester 20% gf	Colour: black RAL 9005
ORDER NO.	MATERIAL	PLATING

CUSTOMER COPY FOR REFERENCE ONLY

NUMBER C-166397-E

DR C.F. Smit July 1989 — DATE

CHK — DATE

DE — DATE

APP — DATE 19-8-80

© 1980 BY AMP-HOLLAND N.V. ALL RIGHTS RESERVED A-MP PRODUCTS COVERED BY PATENTS AND/OR PATENTS PENDING.

AMP

AMP-HOLLAND N.V.
's-Hertogenbosch

WIRE-RANGE | INSUL.-RANGE | FIRST USED

SCALE 2:1 / 4:1 | SIZE B | NO. C-166397-E | REV. E

NAME 96 Pos MALE HOUSING.

DRAWING IN MM. DO NOT SCALE DRAWING