Chipsmall Limited consists of a professional team with an average of over 10 year of expertise in the distribution of electronic components. Based in Hongkong, we have already established firm and mutual-benefit business relationships with customers from,Europe,America and south Asia,supplying obsolete and hard-to-find components to meet their specific needs.

With the principle of “Quality Parts,Customers Priority,Honest Operation,and Considerate Service”,our business mainly focus on the distribution of electronic components. Line cards we deal with include Microchip,ALPS,ROHM,Xilinx,Pulse,ON,Everlight and Freescale. Main products comprise IC,Modules,Potentiometer,IC Socket,Relay,Connector.Our parts cover such applications as commercial,industrial, and automotives areas.

We are looking forward to setting up business relationship with you and hope to provide you with the best service and solution. Let us make a better world for our industry!

Contact us

Tel: +86-755-8981 8866 Fax: +86-755-8427 6832
Email & Skype: info@chipsmall.com Web: www.chipsmall.com
Address: A1208, Overseas Decoration Building, #122 Zhenhua RD., Futian, Shenzhen, China

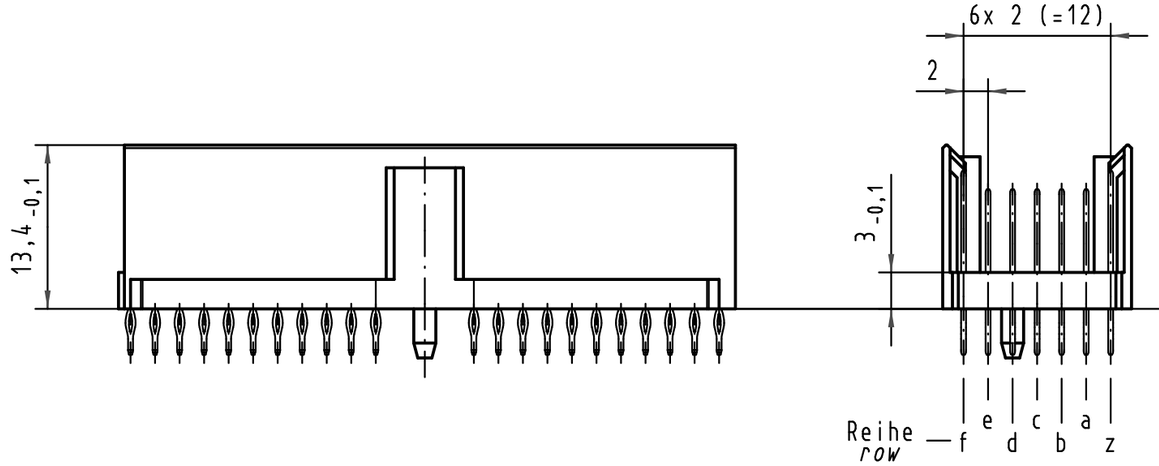

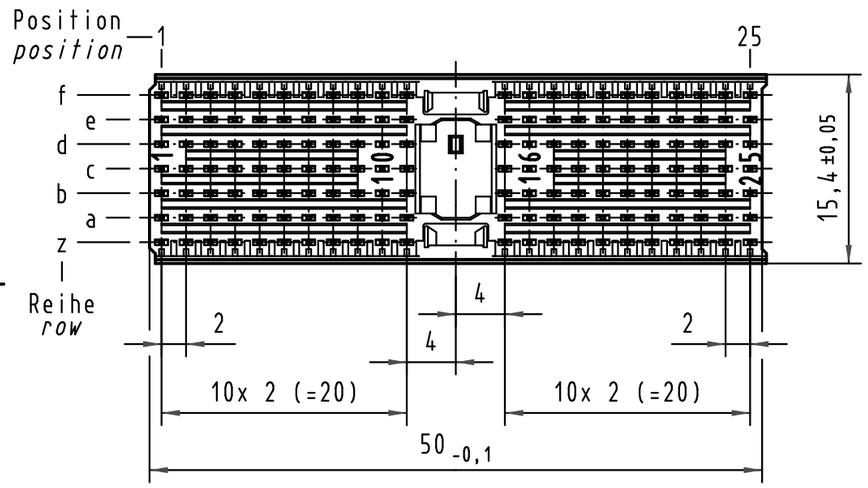

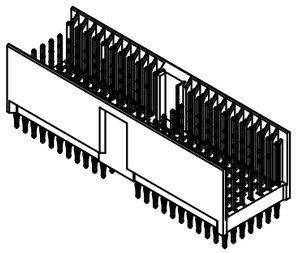

Kontakt-Maße
contact dimensions

(Längen der Steck- und Anschlußseite gelten für eingepreßte Steckverbinder)
(mating and termination length of contacts apply to pressed in connectors)

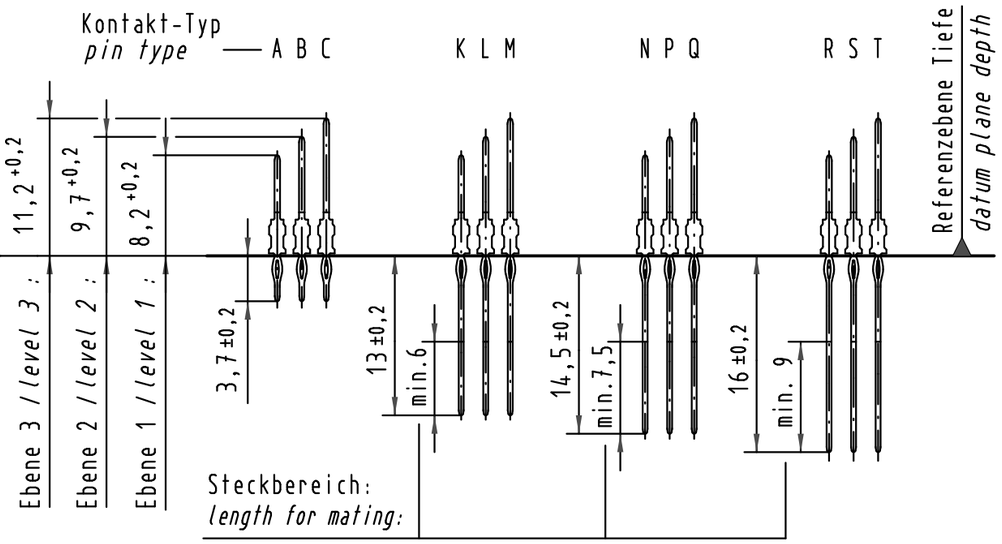

Kontaktbelegung
contact loading

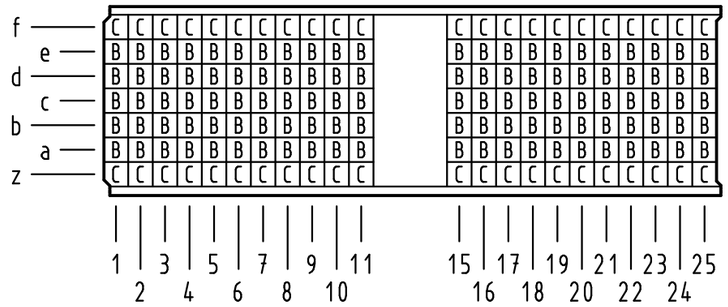

Lochbild
board drillings

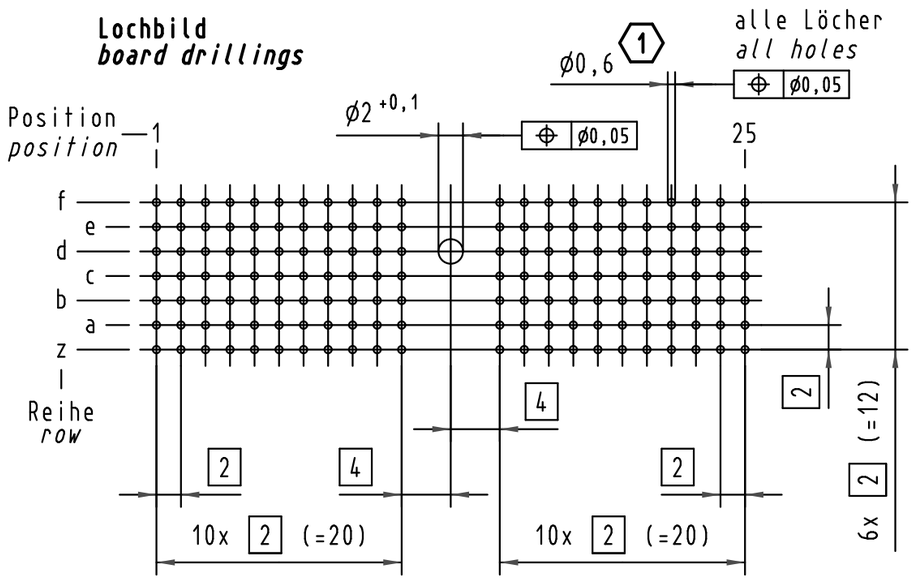

1 Empfohlener Lochaufbau und weitere Informationen siehe: DS 17 00 110 0101
recommended configuration of plated through holes and further information see: DS 17 00 110 0101

Bestell-Nr. *part-no.*	Anforderungsstufe *performance level* 1
17 01 154 4205	S4
17 01 154 2205	2
17 01 154 1205	1

Mod.	Dat.	Name
35947	11.12.09	Hage.
35560	18.08.09	Hage.
34337	16.05.07	Cla
28482	18.08.00	Koe
24115		

All Dimensions in mm
Original Size DIN A 3

Techn. Character.

	Dat.	Name
Detail.	30.09.98	Hl.
Insp.	30.09.98	Wei.
Stand.		

Maßstab/*Scale* 2 : 1

Nicht tolerierte Maße/*Free size tolerances*
IEC 61076-4-101

har-bus HM Messerleiste Typ A
154pol., Anschlußlänge 3,7mm
har-bus HM male connector type A
154pol., termination length 3,7mm

HARTING Electronics GmbH & Co. KG
D-32339 ESPELKAMP

TB 17 01 154 x205

Blatt/*page* /

Sub.

Alle Rechte vorbehalten/ *All rights reserved*