Chipsmall Limited consists of a professional team with an average of over 10 year of expertise in the distribution of electronic components. Based in Hongkong, we have already established firm and mutual-benefit business relationships with customers from,Europe,America and south Asia,supplying obsolete and hard-to-find components to meet their specific needs.

With the principle of “Quality Parts,Customers Priority,Honest Operation,and Considerate Service”,our business mainly focus on the distribution of electronic components. Line cards we deal with include Microchip,ALPS,ROHM,Xilinx,Pulse,ON,Everlight and Freescale. Main products comprise IC,Modules,Potentiometer,IC Socket,Relay,Connector.Our parts cover such applications as commercial,industrial, and automotives areas.

We are looking forward to setting up business relationship with you and hope to provide you with the best service and solution. Let us make a better world for our industry!

# Contact us

Tel: +86-755-8981 8866 Fax: +86-755-8427 6832
Email & Skype: info@chipsmall.com Web: www.chipsmall.com
Address: A1208, Overseas Decoration Building, #122 Zhenhua RD., Futian, Shenzhen, China

THIS DRAWING IS UNPUBLISHED. RELEASED FOR PUBLICATION -,- .
© COPYRIGHT - By - ALL RIGHTS RESERVED.

| LOC | DIST |
|---|---|
| J | — |

REVISIONS 変更

| P | LTR | DESCRIPTION | DATE | DWN | APVD |
|---|---|---|---|---|---|
| | E3 | REVISED PER ECO-11-005140 | 28MAR11 | RK | HMR |

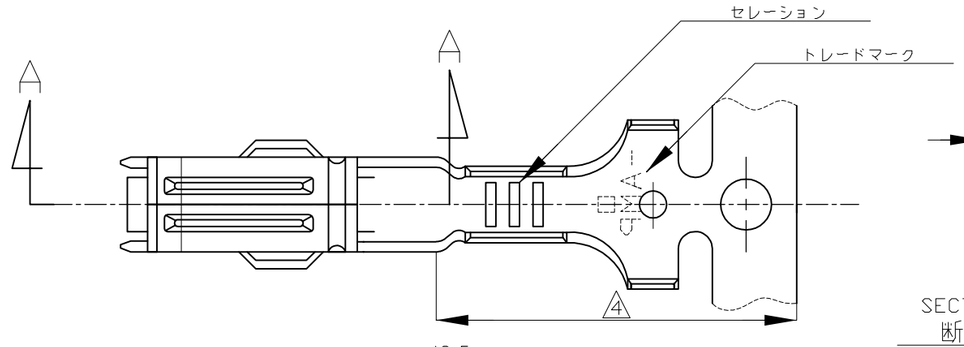


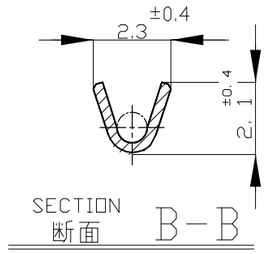


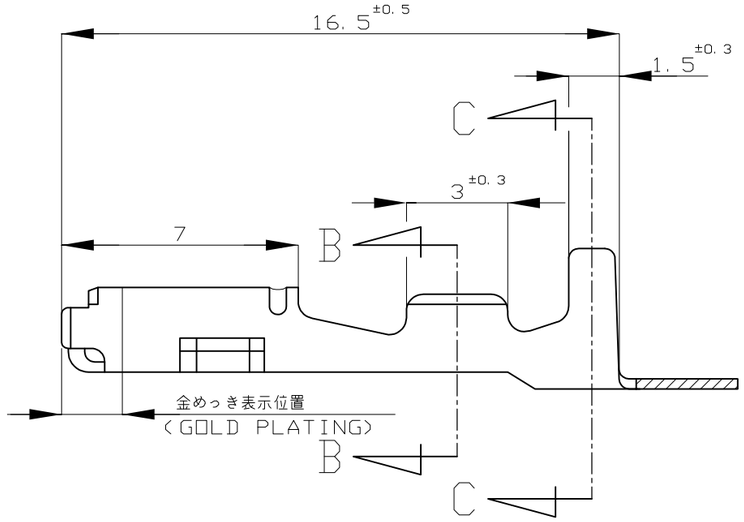


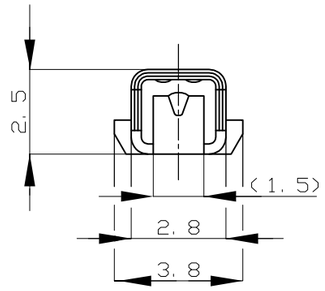


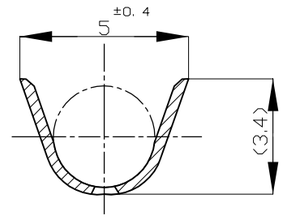


注

1. 嵌合相手端子型番 ; 171631
2. 部分金めっき 0.38μm 最小
3. 部分金めっき1.27μm 最小
4. 部分半田めっき2.0μm最小
5. 一般公差 : 10以下±0.2 10以上30以下±0.25 30以上100以下±0.3 角度±3°

NOTE ;

1. TAB CONTACT ; 171631
2. SELECTIVE GOLD PLATING 0.38μm MIN.
3. SELECTIVE GOLD 1.27μm MIN.
4. SELECTIVE TIN-LEAD PLATING 2.0μm MIN.
5. TOLERANCES UNLESS OTHERWISE SPECIFIED.
   10MAX : ±0.2 10-30 : ±0.25 30-100 : ±0.3 ANGLES : ±3°

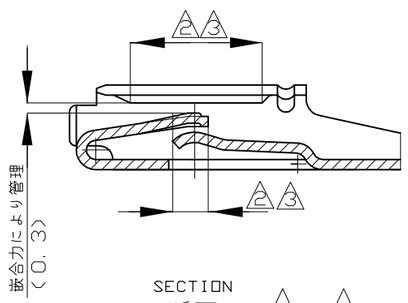


| | | | |
|---|---|---|---|
| OBSOLETE | SELECTIVE GOLD PLATING 部分金めっき 3 4 | PHOS-BRONZE t = 0.3 リン青銅 板厚 0.3 | 171630-6 |
| | SELECTIVE GOLD PLATING 部分金めっき 2 | PHOS-BRONZE t =0.3 リン青銅 板厚 0.3 | 171630-5 |
| | PRE-TIN 錫めっき済(0.76μm MIN.) | PHOS-BRONZE t = 0.3 リン青銅 板厚 0.3 | 171630-2 |
| | PRE-TIN 錫めっき済(0.76μm MIN.) | BRASS t = 0.3 黄銅 板厚 0.3 | 171630-1 |
| | FINISH 仕上 | MATERIAL 材料 | PART NUMBER 型番 |

| 適合電線断面積(WIRE RENGE) | 被覆外径(INSULATION DIA) |
|---|---|
| AVS 0.2-0.5mm² (AWG24-20) | 1.4-2.4mmφ |

THIS DRAWING IS A CONTROLLED DOCUMENT.

DIMENSIONS: 単位 : 粍 mm

TOLERANCES UNLESS OTHERWISE SPECIFIED: 一般公差
0 PLC ± -
1 PLC ± -
2 PLC ± -
3 PLC ± -
4 PLC ± -
ANGLES ± -

MATERIAL 材料: SEE TABLE
FINISH 仕上: SEE TABLE

DWN D.MATSUURA 24OCT07
CHK T.KOHNO 24OCT07
APVD Y.FUJIWARA 24OCT07
PRODUCT SPEC 製品規格 108-5262
APPLICATION SPEC 取付適用規格 114-5082
WEIGHT 0.35g

TE Connectivity

NAME 名称: ECONOSEAL J MK-II CONN RECEPTACLE CONTACT

SIZE A3 | CAGE CODE 00779 | DRAWING NO 番号 C-171630 | RESTRICTED TO —

CUSTOMER DRAWING | SCALE 尺度 5:1 | SHEET 1 OF 1 | REV E3