Chipsmall Limited consists of a professional team with an average of over 10 year of expertise in the distribution of electronic components. Based in Hongkong, we have already established firm and mutual-benefit business relationships with customers from,Europe,America and south Asia,supplying obsolete and hard-to-find components to meet their specific needs.

With the principle of “Quality Parts,Customers Priority,Honest Operation,and Considerate Service”,our business mainly focus on the distribution of electronic components. Line cards we deal with include Microchip,ALPS,ROHM,Xilinx,Pulse,ON,Everlight and Freescale. Main products comprise IC,Modules,Potentiometer,IC Socket,Relay,Connector.Our parts cover such applications as commercial,industrial, and automotives areas.

We are looking forward to setting up business relationship with you and hope to provide you with the best service and solution. Let us make a better world for our industry!

Contact us

Tel: +86-755-8981 8866 Fax: +86-755-8427 6832
Email & Skype: info@chipsmall.com Web: www.chipsmall.com
Address: A1208, Overseas Decoration Building, #122 Zhenhua RD., Futian, Shenzhen, China

NUMBER C-172220

三角法 (3rd ANGLE PROJECTION)

METRIC

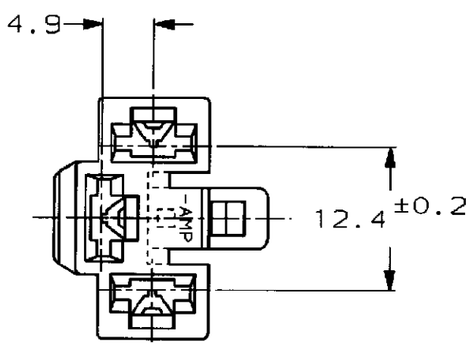

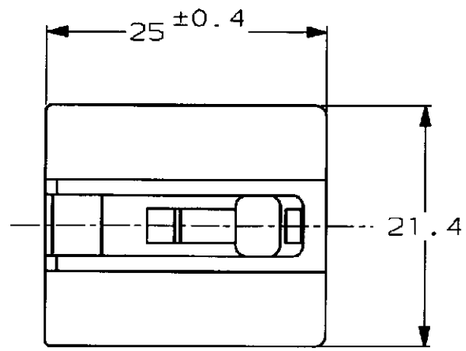

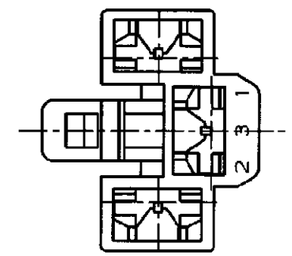

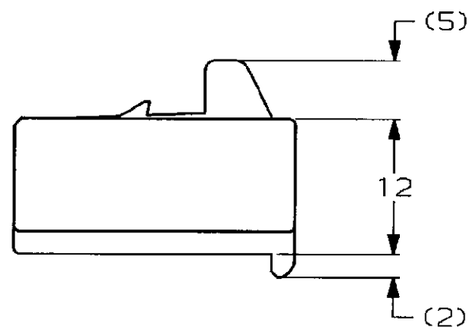

注;

1. 嵌合する相手ハウジングは型番172219
2. 使用端子は型番170342,170343,170350

NOTE;

1. THE MATING CAP HOUSING; P/N 172219
2. APPLIED CONTACT; P/N 170342,170343,170350

3 OBSOLETE PARTS: OBSOLETE CIS STREAMLINING PER D.RENAUD/D.SINISI

	色 (COLOR)	型番 (P/N)
	自然色 (NATURAL)	1-172220-1
3 OBSOLETE	淡灰 (LIGHT GRAY)	~~6-172220-6~~
	黄 (YELLOW)	-7
	灰 (GRAY)	-6
	青 (BLUE)	-5
	緑 (GREEN)	-4
	茶 (BROWN)	-3
3 OBSOLETE	黒 (BLACK)	~~2~~
	自然色 (NATURAL)	172220-1

LTR	変更 (REVISION RECORD)	DR	CHK	DATE
E1	REV PER ECO-10-000445	KK	AEG	JAN10
E	REVISED FJ00-0601-98	AY	AB	31MAR 98
D	REDROWN W/O CHANGE FJ00-1019-93	TS	AT	12/8 '93

Copyright ©1979年 日本エー・エム・ピー株式会社
Copyright ©1979 AMP (Japan), LTD. ALL RIGHTS RESERVED.

AMP 日本エー・エム・ピー株式会社 Tokyo, Japan

適合電線断面積 (WIRE RANGE) mm² (AWG –) | 被覆外径 (INSULATION DIA.) mmφ

名称 (NAME) 250 シリーズ ファストン インターロック コネクタ 3極 プラグ ハウジング
250 SERIES FASTON INTER-LOCK CONNECTOR 3Pos PLUG HOUSING

材料 (MATERIAL) 66 ナイロン (66 NYLON)
仕上 (FINISH) 色：表参照 COLOR; SEE TABLE

DR. T. Shishara 12/8'93
DE. K. Yuasa 12/8'93
CHK. 〃
APP. D. Sonita 12/8'93

一般公差 (GENERAL TOLERANCE)
10以下：±0.2
10を超え30以下：±0.25
30を超え100以下：±0.3
角度：±3°

LOC B J
番号 (No.) C-172220
尺度 (SCALE) 2-1
REV. E1
SHEET 1 OF 1

単位：mm DIMENSIONS IN MM. DO NOT SCALE PRINT

PRINT DIST

AMP-J010-2C REV 3/93

F1029188

(CUSTOMER DRAWING) 参考図面