Chipsmall Limited consists of a professional team with an average of over 10 year of expertise in the distribution of electronic components. Based in Hongkong, we have already established firm and mutual-benefit business relationships with customers from,Europe,America and south Asia,supplying obsolete and hard-to-find components to meet their specific needs.

With the principle of “Quality Parts,Customers Priority,Honest Operation,and Considerate Service”,our business mainly focus on the distribution of electronic components. Line cards we deal with include Microchip,ALPS,ROHM,Xilinx,Pulse,ON,Everlight and Freescale. Main products comprise IC,Modules,Potentiometer,IC Socket,Relay,Connector.Our parts cover such applications as commercial,industrial, and automotives areas.

We are looking forward to setting up business relationship with you and hope to provide you with the best service and solution. Let us make a better world for our industry!

Contact us

Tel: +86-755-8981 8866 Fax: +86-755-8427 6832
Email & Skype: info@chipsmall.com Web: www.chipsmall.com
Address: A1208, Overseas Decoration Building, #122 Zhenhua RD., Futian, Shenzhen, China

NUMBER C-172506

三角法(3rd ANGLE PROJECTION)

METRIC

単位:mm DIMENSIONS IN MM. DO NOT SCALE PRINT

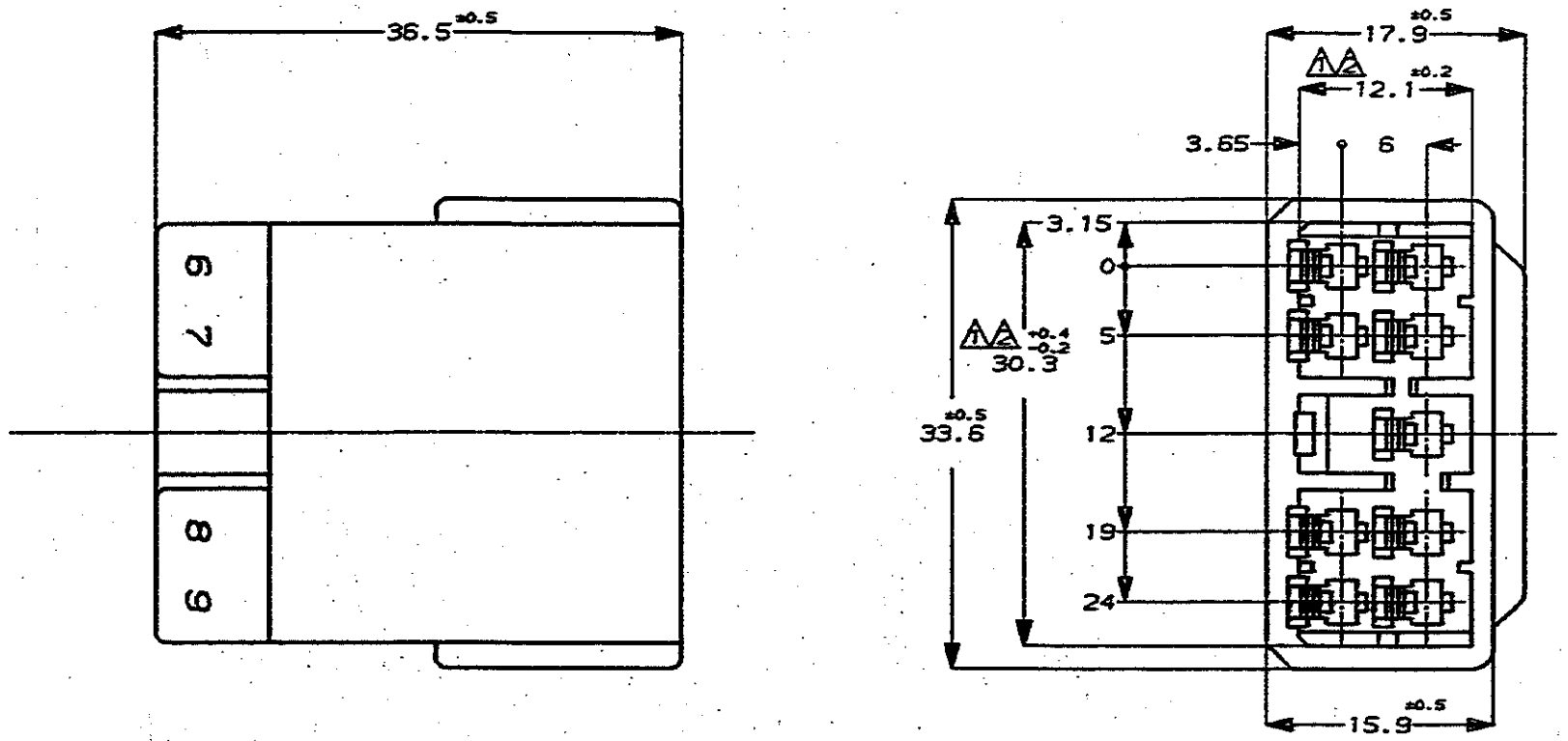

NOTES;

1. TO BE MEASURED WITH IN 2mm FROM -A-
2. IN COUPLING WITH THE PLUG HOUSING MATING SATISFIES FUNCTION
3. APPLIED CONTACT P/N 172777,172779
4. PRODUCT SPEC No. 108-5166
5. IN COUPLING WITH THE PLUG HOUSING MATING FORCE 29.4N(3KgF)MAX. WITHOUT REC CONTACT

注;

1. -A- 面より2mmの範囲で測定
2. 相手ハウジングと所定の機能を満たして嵌合できること
3. 内装するタブコンタクト型番172777,172779他
4. 製品規格 NO.108-5166
5. 相手ハウジングとの嵌合力は29.4N(3KgF)以下
   但しタブコンタクトは含まない

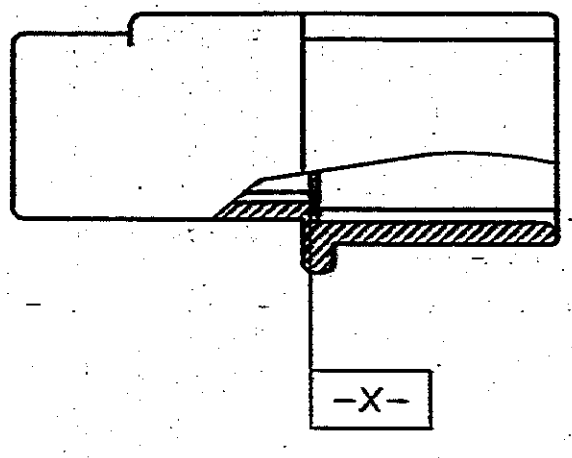

番号(P/N)	色(COLOR)
172506-7	黄(YELLOW)
172506-6	灰(GRAY)
172506-4	緑(GREEN)
172506-3	茶(BROWN)
172506-2	黒(BLACK)
172506-1	自然色(NATURAL)

Copyright ©1982年 日本エー・エム・ピー株式会社

Copyright ©1982 AMP (Japan), LTD. ALL RIGHTS RESERVED.

AMP 日本エー・エム・ピー株式会社 Tokyo, Japan

LTR	変更 (REVISION RECORD)	DR	CHK	DATE
A	再作成 J-1630	K.Y	K.T	10/12 92

適合電線絶縁被覆(WIRE RANGE)	mm² (AWS -)
絶縁外径(INSULATION DIA.)	mmφ
材料(MATERIAL)	(NYLON) ナイロン樹脂
仕上(FINISH)	
名称(NAME)	9 Pos. CAP HOUSING MULTI-INTERLOCK CONN. (MIC-MKII) 9極 キャップ ハウジング マルチインターロック コネクタ (MIC-MKII)
一般公差(GENERAL TOLERANCE)	10以下: ±0.2; 10を超え30以下: ±0.25; 30を超え100以下: ±0.3; 角: ±3°
DR.	K. Yoshiyuki 10/12 92
DE.	K. Yoshiyuki 10/12 92
CHK.	K. Tomita 10/12 92
APP.	K. Tomita 10/12 92
LOC	J
番号(No.)	C-172506
尺度(SCALE)	2-1
REV.	A
SHEET	1 OF 1

PRINT DIST

AMP-J REV.10/'89

(CUSTOMER DRAWING) 参 考 図 面