Chipsmall Limited consists of a professional team with an average of over 10 year of expertise in the distribution of electronic components. Based in Hongkong, we have already established firm and mutual-benefit business relationships with customers from,Europe,America and south Asia,supplying obsolete and hard-to-find components to meet their specific needs.

With the principle of “Quality Parts,Customers Priority,Honest Operation,and Considerate Service”,our business mainly focus on the distribution of electronic components. Line cards we deal with include Microchip,ALPS,ROHM,Xilinx,Pulse,ON,Everlight and Freescale. Main products comprise IC,Modules,Potentiometer,IC Socket,Relay,Connector.Our parts cover such applications as commercial,industrial, and automotives areas.

We are looking forward to setting up business relationship with you and hope to provide you with the best service and solution. Let us make a better world for our industry!

Contact us

Tel: +86-755-8981 8866 Fax: +86-755-8427 6832
Email & Skype: info@chipsmall.com Web: www.chipsmall.com
Address: A1208, Overseas Decoration Building, #122 Zhenhua RD., Futian, Shenzhen, China

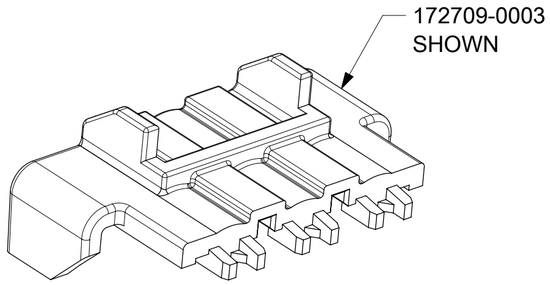

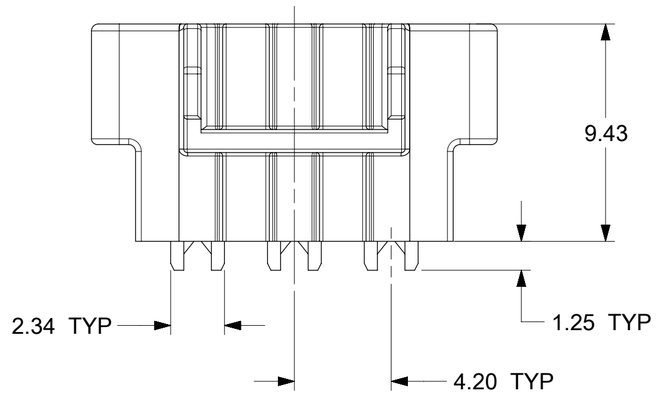

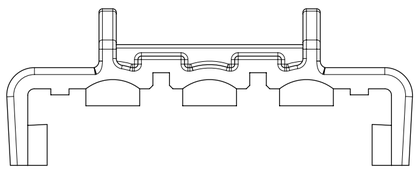

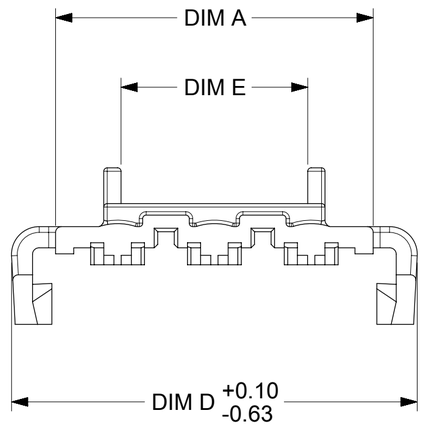

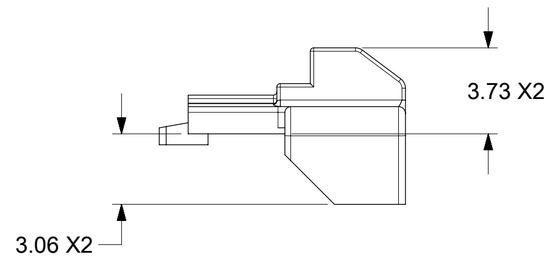

PART NUMBER	CKTS	MATERIAL	DIM A	DIM D	DIM E
172709-0001	1	A	7.98	11.80	5.34
172709-0002	2	A	9.58	13.40	6.90
172709-0003	3	A	13.78	17.60	8.10
172709-0004	4	A	17.98	21.80	8.10
172709-0005	5	A	22.18	26.00	8.10
172709-0006	6	A	26.38	30.20	8.10
172709-0101	1	B	7.98	11.80	5.34
172709-0102	2	B	9.58	13.40	6.90
172709-0103	3	B	13.78	17.60	8.10
172709-0104	4	B	17.98	21.80	8.10
172709-0105	5	B	22.18	26.00	8.10
172709-0106	6	B	26.38	30.20	8.10
1727090007	7	A	30.58	34.40	8.10
1727090008	8	A	34.78	38.60	8.10
1727090009	9	A	38.98	42.80	8.10
1727090010	10	A	43.18	47.00	8.10
1727090011	11	A	47.38	51.20	8.10
1727090012	12	A	51.58	55.40	8.10
1727090107	7	B	30.58	34.40	8.10
1727090108	8	B	34.78	38.60	8.10
1727090109	9	B	38.98	42.80	8.10
1727090110	10	B	43.18	47.00	8.10
1727090111	11	B	47.38	51.20	8.10
1727090112	12	B	51.58	55.40	8.10

NOTES:

1. MATERIAL:
   'A' = NYLON V-0, LOW HALOGEN, COLOR: NATURAL (WHITE)
   'B' = NYLON V-2, GLOW WIRE CAPABLE, COLOR: NATURAL (WHITE)
2. FINISH: NONE
3. PRODUCT SPECIFICATION: PS-172718-0000
   APPLICATION SPECIFICATION: AS-172718-0000
4. PACKAGING SPECIFICATION:
   PK-172709-0000
   PK-5557-003
   REFER TO AS-45499-001 FOR MOISTURIZING NYLON CONNECTOR PARTS.
5. THIS TPA TO BE USED WITH MOLEX FRONT HOUSING SERIES 172708, 172762, 172767, 200453, 200471 & 200488.
6. DIMENSIONS GIVEN ACROSS CENTERLINES ARE TO BE SYMMETRICAL ABOUT THOSE CENTERLINES WITHIN HALF THE TOTAL TOLERANCE.
7. THIS PART CONFORMS TO CLASS 'B' REQUIREMENTS OF COSMETIC SPECIFICATION PS-45499-002.

RELEASE STATUS	P1	RELEASE DATE	20.02.2017 22:13:27

THIS DRAWING CONTAINS INFORMATION THAT IS PROPRIETARY TO MOLEX ELECTRONIC TECHNOLOGIES, LLC AND SHOULD NOT BE USED WITHOUT WRITTEN PERMISSION

CORR NOTE 1, ADD P/N 2016/11/29
EC NO: 113658
DRWN: SNAGARAVENKA
CHK'D: 2017/02/20
APPR: RHODGE
REV C

GENERAL TOLERANCES (UNLESS SPECIFIED)
ANGULAR TOL ± °
4 PLACES ±
3 PLACES ±
2 PLACES ± 0.13
1 PLACE ± 0.2
0 PLACES ±
DRAFT WHERE APPLICABLE MUST REMAIN WITHIN DIMENSIONS

DIMENSION UNITS: MM
SCALE: 5:1
DRWN BY: TGREGORI DATE: 2014/09/10
CHK'D BY: TGREGORI DATE: 2016/07/27
APPR BY: RHODGE DATE: 2014/12/04
DRAWING SIZE: C
THIRD ANGLE PROJECTION

molex®

TPA
MINI-FIT TPA2

PRODUCT CUSTOMER DRAWING

SERIES	MATERIAL NUMBER	CUSTOMER
172709	SEE TABLE	GENERAL MARKET

DOCUMENT NUMBER	DOC TYPE	DOC PART	SHEET NUMBER
SD-172709-0000	PSD	000	1 OF 1

FORMAT: master-tb-prod-C
REVISION: G
DATE: 2015/12/14