Chipsmall Limited consists of a professional team with an average of over 10 year of expertise in the distribution of electronic components. Based in Hongkong, we have already established firm and mutual-benefit business relationships with customers from,Europe,America and south Asia,supplying obsolete and hard-to-find components to meet their specific needs.

With the principle of “Quality Parts,Customers Priority,Honest Operation,and Considerate Service”,our business mainly focus on the distribution of electronic components. Line cards we deal with include Microchip,ALPS,ROHM,Xilinx,Pulse,ON,Everlight and Freescale. Main products comprise IC,Modules,Potentiometer,IC Socket,Relay,Connector.Our parts cover such applications as commercial,industrial, and automotives areas.

We are looking forward to setting up business relationship with you and hope to provide you with the best service and solution. Let us make a better world for our industry!

Contact us

Tel: +86-755-8981 8866 Fax: +86-755-8427 6832
Email & Skype: info@chipsmall.com Web: www.chipsmall.com
Address: A1208, Overseas Decoration Building, #122 Zhenhua RD., Futian, Shenzhen, China

THIS DRAWING IS UNPUBLISHED. RELEASED FOR PUBLICATION -,- .
© COPYRIGHT - BY TYCO ELECTRONICS CORPORATION. ALL RIGHTS RESERVED.

LOC	DIST
DW	—

REVISIONS

P	LTR	DESCRIPTION	DATE	DWN	APVD
	G	REVISED (ECR-11-006592)	07APR11	JC	WK

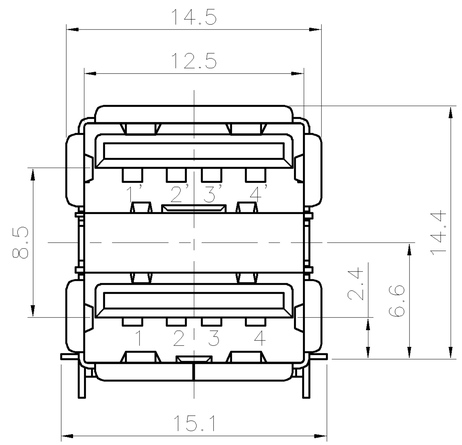

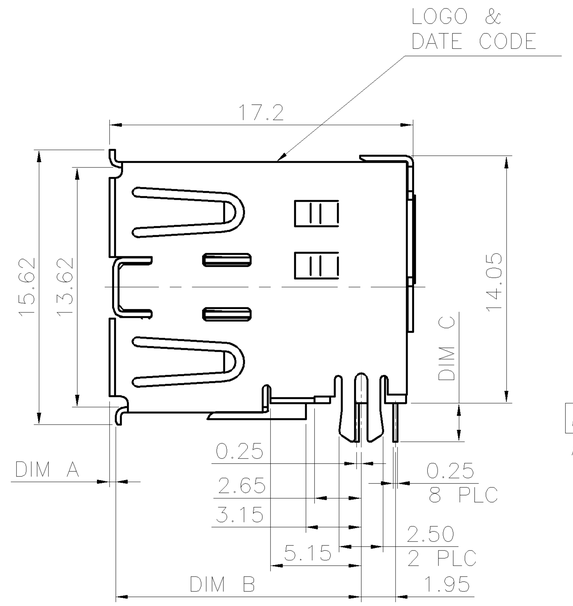

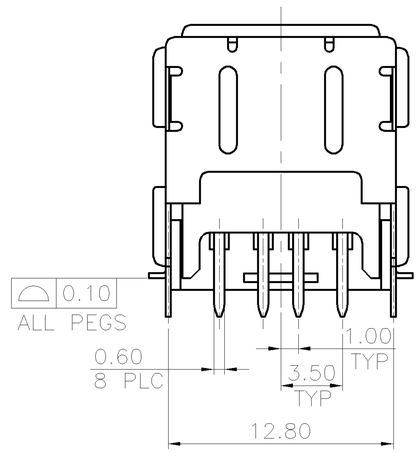

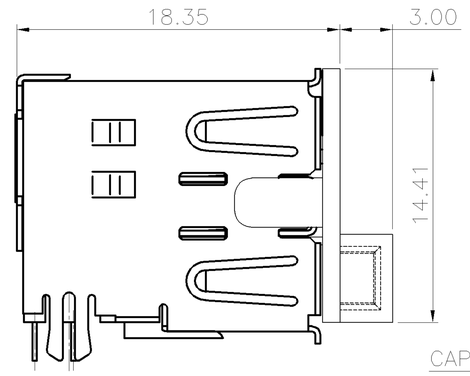

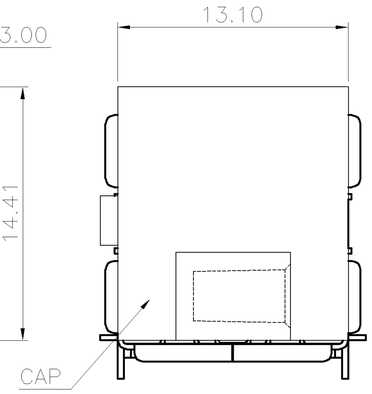

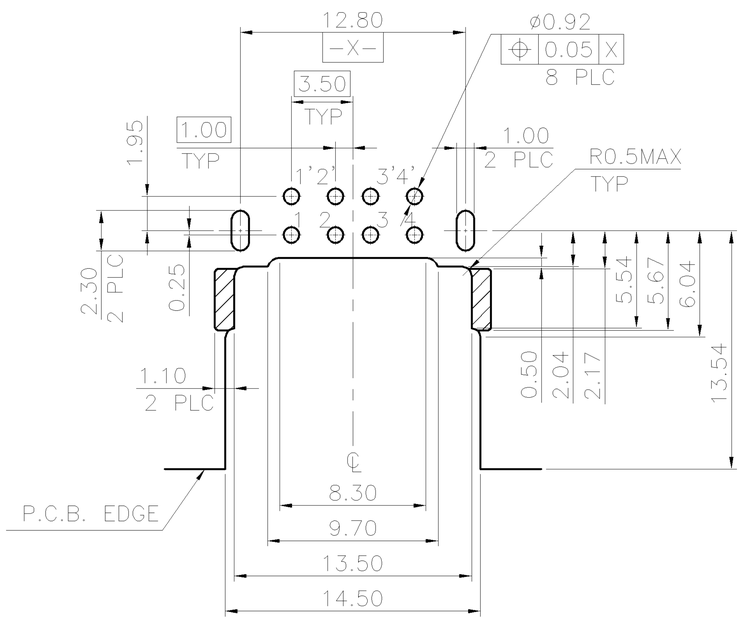

RECOMMEND P.C.B LAYOUT (THICKNESS 1.2~1.4mm)
(COMPONENT SIDE) TOLERANCE±0.05mm

NOTES:
1. MATERIAL:
   HOUSING: PA9T WITH 30% GF, UL 94V-0 RATED, BLACK COLOR.
   SPACER: PA9T WITH 30% GF, UL 94V-0 RATED, BLACK COLOR.
   CAP: PA9T WITH 30% GF, UL 94V-0 RATED, BLACK COLOR.
   CONTACT: PHOSPHOR BRONZE.
   FRONT SHIELD: BRASS.
   REAR SHIELD: SPCC.
   GROUNDING STRIP: BRASS.
2. FINISH:
   CONTACT: 0.762μm [30μ"] MIN. GOLD PLATING ON CONTACT AREA.
   3.048μm [120μ"] MIN. MATTE TIN PLATING ON SOLDER TAILS,
   WITH ENTIREC CONTACT UNDERPLATED 1.27mμ" [50μ"] MIN. NICKEL.
   FRONT SHIELD: 0.762μm [30μ"] MIN. NICKEL PLATING.
   0.762μm [30μ"] MIN. Cu UNDER PLATING OVERALL.
   REAR SHIELD: 0.762μm [30μ"] MIN. NICKEL PLATING.
   0.762μm [30μ"] MIN. Cu UNDER PLATING OVERALL.
   GROUNDING STRIP: 0.762μm [30μ"] MIN. NICKEL PLATING.
   0.762μm [30μ"] MIN. Cu UNDER PLATING OVERALL.
3. REFLOW SOLDER CAPABLE TO 260°C PER TE SPEC 109-201, CONDITION B.

DIM C	DIM B	DIM A	CAP	PACKAGE	PART NUMBER	NOTE
1.90	14.30	0	W/	TAPE & REEL	1734062-3	
2.20	13.95	0.35	W/O	TUBE	1734062-2	OBSOLETED
				TAPE & REEL	1734062-1	

THIS DRAWING IS A CONTROLLED DOCUMENT.

DIMENSIONS: MM

TOLERANCES UNLESS OTHERWISE SPECIFIED:

0 PLC	± -
1 PLC	± 0.35
2 PLC	± 0.25
3 PLC	± -
4 PLC	± -
ANGLES	± 3°

MATERIAL: SEE NOTE

FINISH: SEE NOTE

DWN F. YANG 10SEP2009
CHK S. CHIEN 10SEP2009
APVD W. KODAMA 10SEP2009

PRODUCT SPEC 108-57481

QUALIFICATION TEST REPORT 501-57557

WEIGHT 4.71 GRAMS

CUSTOMER DRAWING

TE Connectivity

NAME: USB CONNECTOR, A SERIES, STACKED, OFFSET TYPE

SIZE	CAGE CODE	DRAWING NO	RESTRICTED TO
A3	00779	C-1734062	—

SCALE — SHEET 1 OF 24 REV G

THIS DRAWING IS UNPUBLISHED. RELEASED FOR PUBLICATION -,- .
© COPYRIGHT - BY TYCO ELECTRONICS CORPORATION. ALL RIGHTS RESERVED.

LOC	DIST
DW	—

REVISIONS

P	LTR	DESCRIPTION	DATE	DWN	APVD
		SEE SHEET 1.			

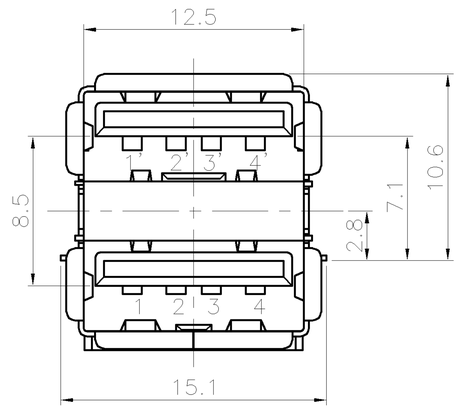

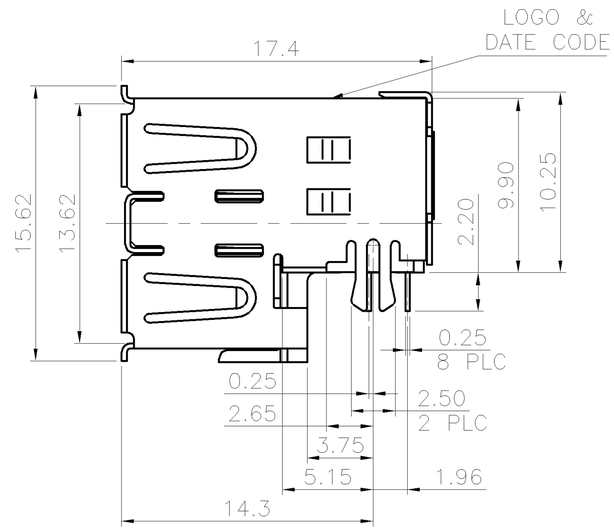

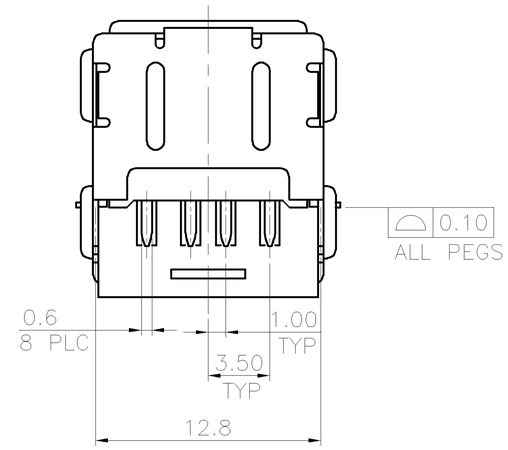

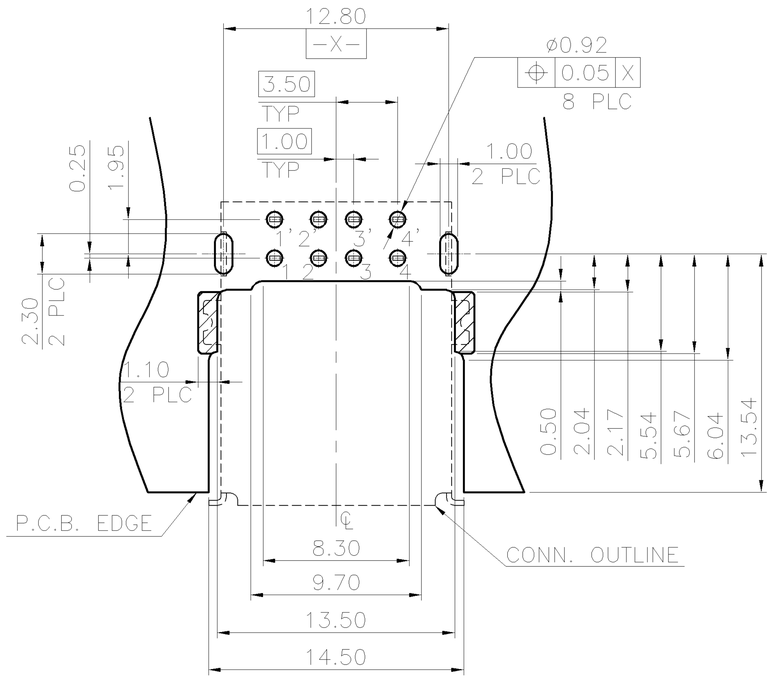

RECOMMEND P.C.B LAYOUT (THICKNESS 1.2~1.4mm)
(COMPONENT SIDE) TOLERANCE±0.05mm

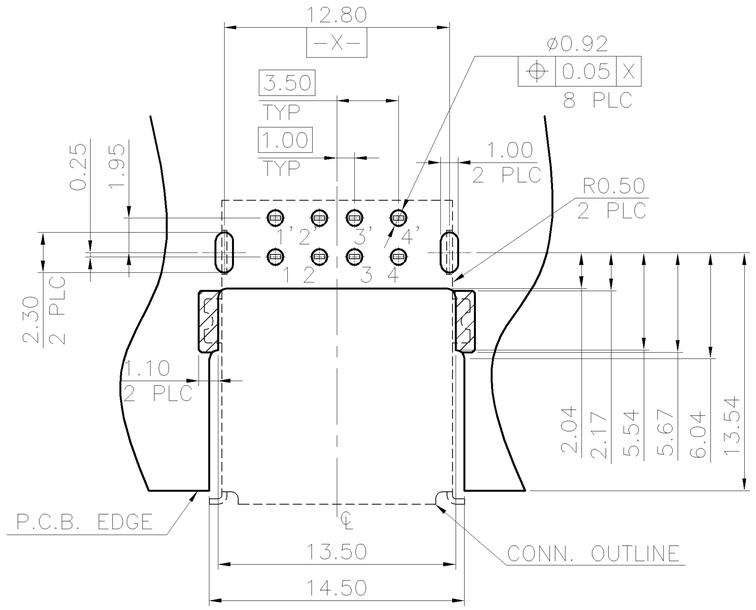

RECOMMEND P.C.B LAYOUT (THICKNESS 1.2~1.4mm)
(COMPONENT SIDE) TOLERANCE±0.05mm

NOTE:
1. MATERIAL:
   HOUSING: PA9T WITH 30% GF, UL 94V-0 RATED, BLACK COLOR.
   SPACER: PA9T WITH 30% GF, UL 94V-0 RATED, BLACK COLOR.
   CONTACT: PHOSPHOR BRONZE.
   FRONT SHIELD: BRASS.
   REAR SHIELD: SPCC.
   GROUNDING STRIP: BRASS.
2. FINISH:
   CONTACT: 0.762μm [30μ"] MIN. GOLD PLATING ON CONTACT AREA.
   3.048μm [120μ"] MIN. BRIGHT TIN PLATING ON SOLDER TAILS,
   WITH ENTIREC CONTACT UNDERPLATED 1.27μm [50μ"] MIN. NICKEL.
   FRONT SHIELD: 0.762μm [30μ"] MIN. NICKEL PLATING.
   0.762μm [30μ"] MIN. Cu UNDER PLATING OVERALL.
   REAR SHIELD: 0.762μm [30μ"] MIN. NICKEL PLATING.
   0.762μm [30μ"] MIN. Cu UNDER PLATING OVERALL.
   GROUNDING STRIP: 0.762μm [30μ"] MIN. NICKEL PLATING.
   0.762μm [30μ"] MIN. Cu UNDER PLATING OVERALL.
3. REFLOW SOLDER CAPABLE TO 260°C PER TE SPEC 109-201, CONDITION B.

NOTE	PACKAGE	PART NUMBER
OBSOLETED	TUBE	1-1734062-2
	TAPE & REEL	1-1734062-1

THIS DRAWING IS A CONTROLLED DOCUMENT.

DIMENSIONS: MM

TOLERANCES UNLESS OTHERWISE SPECIFIED:

0 PLC	± -
1 PLC	± 0.35
2 PLC	± 0.25
3 PLC	± -
4 PLC	± -
ANGLES	± 3°

MATERIAL: SEE NOTE

FINISH: SEE NOTE

DWN
CHK
APVD
PRODUCT SPEC
QUALIFICATION TEST REPORT
WEIGHT 4.71 GRAMS

TE Connectivity

NAME: USB CONNECTOR, A SERIES, STACKED, OFFSET TYPE

SIZE	CAGE CODE	DRAWING NO	RESTRICTED TO
A3	00779	C-1734062	—

CUSTOMER DRAWING | SCALE — | SHEET 2 OF 24 | REV G

THIS DRAWING IS UNPUBLISHED. RELEASED FOR PUBLICATION -,- .
© COPYRIGHT - BY TYCO ELECTRONICS CORPORATION. ALL RIGHTS RESERVED.

LOC	DIST
DW	—

REVISIONS

P	LTR	DESCRIPTION	DATE	DWN	APVD
		SEE SHEET 1.			

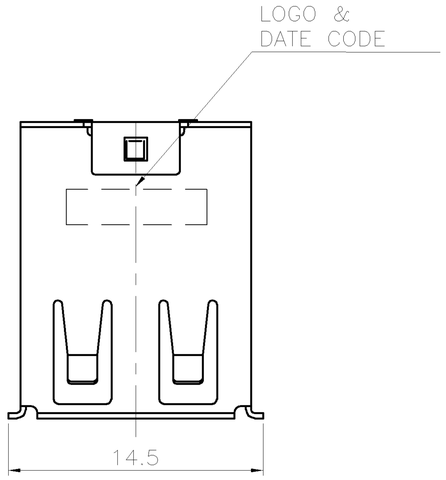

NOTE:
1. MATERIAL:
   HOUSING: PA9T WITH 30% GF, UL 94V-0 RATED, BLACK COLOR.
   SPACER: PA9T WITH 30% GF, UL 94V-0 RATED, BLACK COLOR.
   CONTACT: PHOSPHOR BRONZE.
   FRONT SHIELD: BRASS.
   REAR SHIELD: SPCC.
   GROUNDING STRIP: BRASS.
2. FINISH:
   CONTACT: 0.76μ"m [30μ"] MIN. GOLD PLATING ON CONTACT AREA.
   3.048μ"m [120μ"] MIN. BRIGHT TIN PLATING ON SOLDER TAIL,
   WITH ENTIRE CONTACT UNDERPLATED 1.27mμ" [50μ"] MIN. NICKEL.
   FRONT SHIELD: 0.76μ"m [30μ"] MIN. NICKEL PLATING.
   0.76μ"m [30μ"] MIN. Cu UNDER PLATING OVERALL.
   REAR SHIELD: 0.762μm [30μ"] MIN. NICKEL PLATING.
   0.762μm [30μ"] MIN. Cu UNDER PLATING OVERALL.
   GROUNDING STRIP: 0.762μm [30μ"] MIN. NICKEL PLATING.
   0.762μm [30μ"] MIN. Cu UNDER PLATING OVERALL.
3. REFLOW SOLDER CAPABLE TO 260°C PER TE
   SPEC 109-201, CONDITION B.

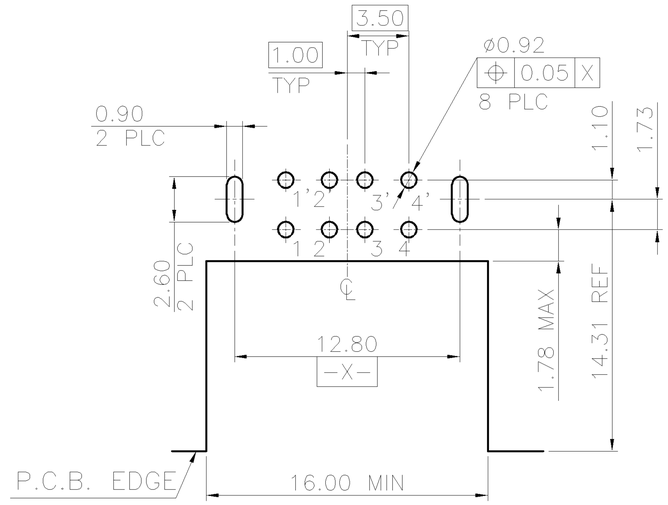

RECOMMEND P.C.B LAYOUT (THICKNESS 1.2mm)
(COMPONENT SIDE) TOLERANCE±0.05mm

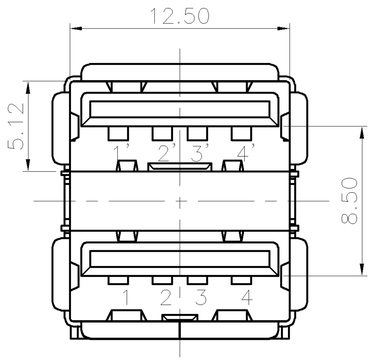

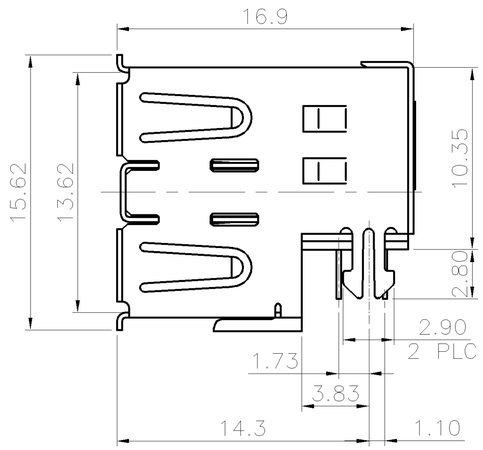

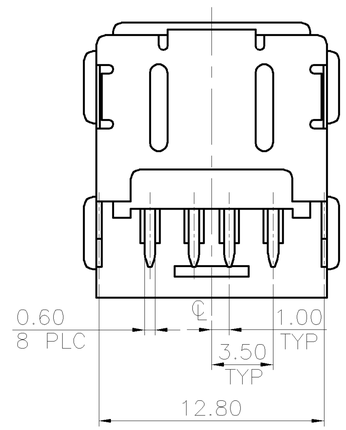

TRAY	2-1734062-2
TUBE	2-1734062-1
PACKAGE	PART NUMBER

THIS DRAWING IS A CONTROLLED DOCUMENT.

DIMENSIONS: MM

TOLERANCES UNLESS OTHERWISE SPECIFIED:

0 PLC	± -
1 PLC	± 0.35
2 PLC	± 0.25
3 PLC	± -
4 PLC	± -
ANGLES	± 3°

MATERIAL: SEE NOTE

FINISH: SEE NOTE

DWN
CHK
APVD
PRODUCT SPEC
QUALIFICATION TEST REPORT
WEIGHT 4.71 GRAMS

TE Connectivity

NAME: USB CONNECTOR, A SERIES, STACKED, OFFSET TYPE

SIZE	CAGE CODE	DRAWING NO	RESTRICTED TO
A3	00779	C-1734062	—

CUSTOMER DRAWING | SCALE — | SHEET 3 OF 24 | REV G

THIS DRAWING IS UNPUBLISHED. RELEASED FOR PUBLICATION -,- .
© COPYRIGHT - BY TYCO ELECTRONICS CORPORATION. ALL RIGHTS RESERVED.

LOC	DIST
DW	—

REVISIONS

P	LTR	DESCRIPTION	DATE	DWN	APVD
		SEE SHEET 1.			

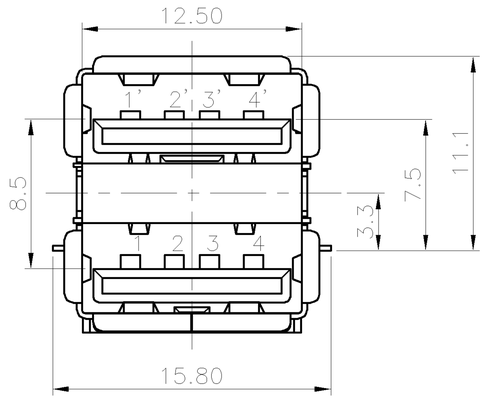

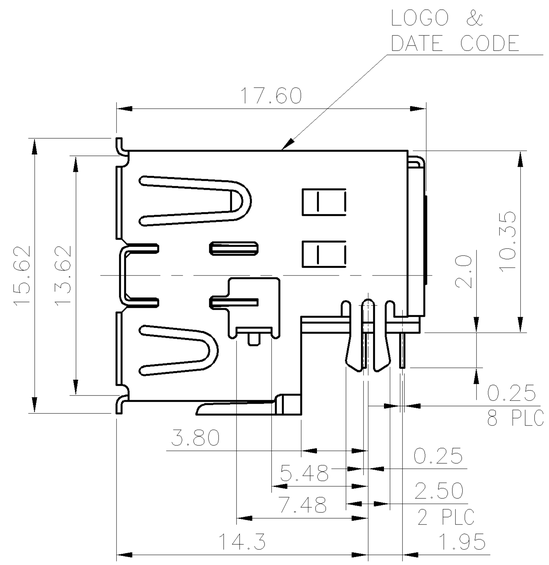

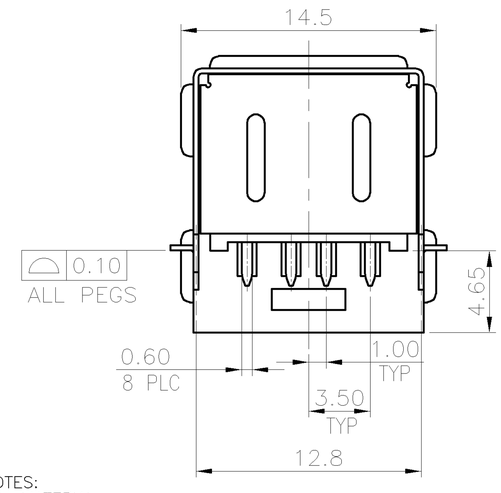

NOTES:
1. MATERIAL:
   HOUSING: PA9T WITH 30% GF, UL 94V-0 RATED, BLACK COLOR.
   SPACER: PA9T WITH 30% GF, UL 94V-0 RATED, BLACK COLOR.
   CONTACT: PHOSPHOR BRONZE.
   FRONT SHIELD: BRASS.
   REAR SHIELD: SPCC.
   GROUNDING STRIP: STAINLESS.
2. FINISH:
   CONTACT: 0.762μm [30μ"] MIN. GOLD PLATING ON CONTACT AREA.
   3.048μm [120μ"] MIN. MATTE TIN PLATING ON SOLDER TAILS,
   1.27μm [50μ"] MIN. NICKEL UNDERPLATED WITH ENTIRE CONTACT .
   FRONT SHIELD: 0.762μm [30μ"] MIN. NICKEL PLATING.
   0.762μm [30μ"] MIN. Cu UNDER PLATING OVERALL.
   REAR SHIELD: 0.762μm [30μ"] MIN. NICKEL PLATING.
   0.762μm [30μ"] MIN. Cu UNDER PLATING OVERALL.
3. FINISH:
   CONTACT: 0.254μm [10μ"] MIN. GOLD PLATING ON CONTACT AREA.
   3.048μm [120μ"] MIN. MATTE TIN PLATING ON SOLDER TAILS,
   1.27μm [50μ"] MIN. NICKEL UNDERPLATED WITH ENTIRE CONTACT.
   FRONT SHIELD: 0.762μm [30μ"] MIN. NICKEL PLATING.
   0.762μm [30μ"] MIN. Cu UNDER PLATING OVERALL.
   SPUTTERING/BLACK PLATING IN FRONT SURFACE.
   REAR SHIELD: 0.762μm [30μ"] MIN. NICKEL PLATING.
   0.762μm [30μ"] MIN. Cu UNDER PLATING OVERALL.
   GROUNDING STRIP: SPUTTERING/BLACK PLATING IN FRONT SURFACE.
4. REFLOW SOLDER CAPABLE TO 260°C PER TE SPEC 109-201, CONDITION B.

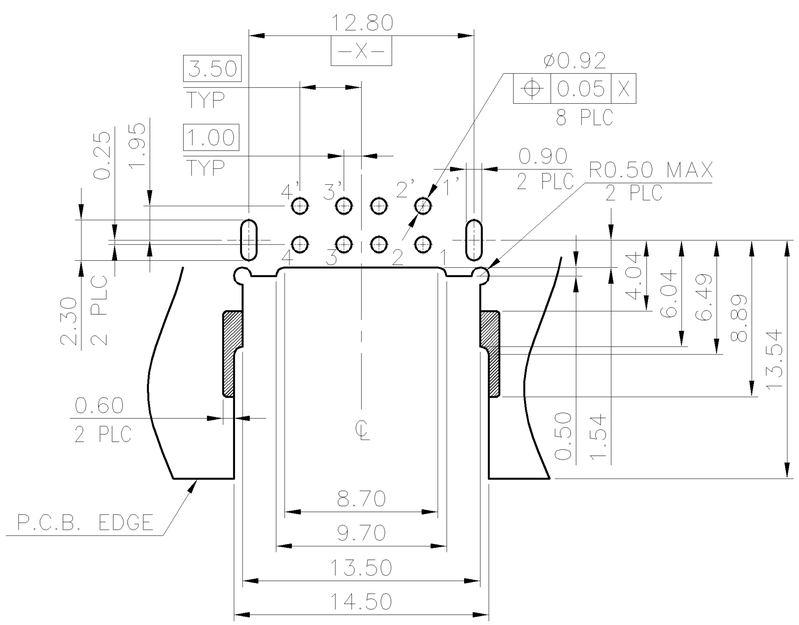

RECOMMEND P.C.B LAYOUT (THICKNESS 1.4~1.6mm)
(COMPONENT SIDE) TOLERANCE±0.05mm

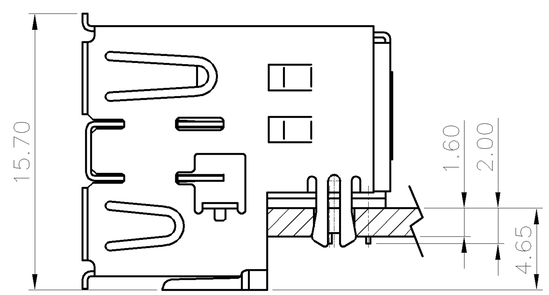

RECOMMENDED MOUNT DIMENSION

3	TAPE & REEL	3-1734062-4
2	TAPE & REEL	3-1734062-3
	TUBE	3-1734062-2
	TRAY	3-1734062-1
FINISH	PACKAGE	PART NUMBER

THIS DRAWING IS A CONTROLLED DOCUMENT.

DIMENSIONS: MM

TOLERANCES UNLESS OTHERWISE SPECIFIED:

0 PLC	± -
1 PLC	± 0.35
2 PLC	± 0.25
3 PLC	± -
4 PLC	± -
ANGLES	± 3°

MATERIAL: SEE NOTE

FINISH: SEE NOTE

DWN
CHK
APVD
PRODUCT SPEC
QUALIFICATION TEST REPORT
WEIGHT 4.71 GRAMS

TE Connectivity

NAME: USB CONNECTOR, A SERIES, STACKED, OFFSET TYPE

SIZE	CAGE CODE	DRAWING NO	RESTRICTED TO
A3	00779	C-1734062	—

CUSTOMER DRAWING | SCALE — | SHEET 4 OF 24 | REV G

THIS DRAWING IS UNPUBLISHED. RELEASED FOR PUBLICATION -,- .
© COPYRIGHT - BY TYCO ELECTRONICS CORPORATION. ALL RIGHTS RESERVED.

LOC	DIST
DW	—

REVISIONS

P	LTR	DESCRIPTION	DATE	DWN	APVD
		SEE SHEET 1.			

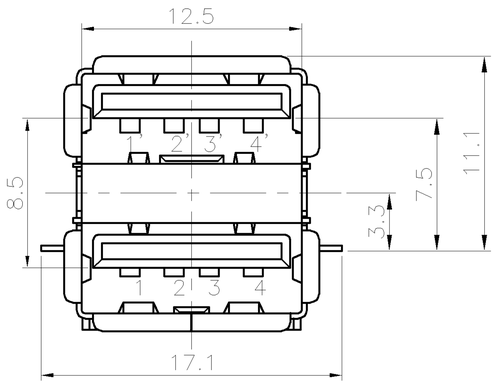

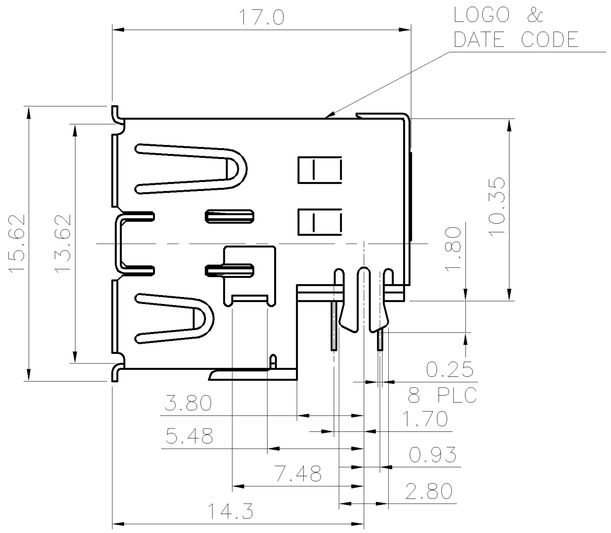

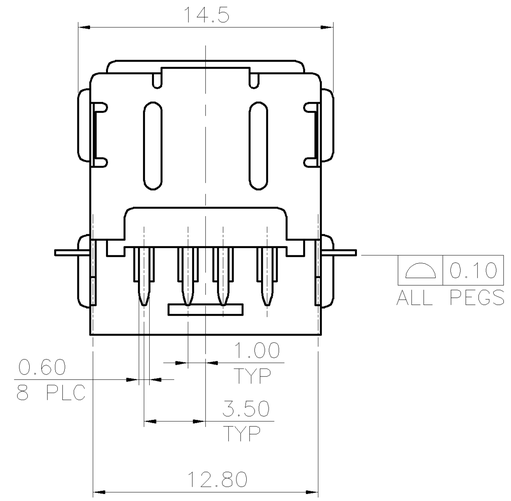

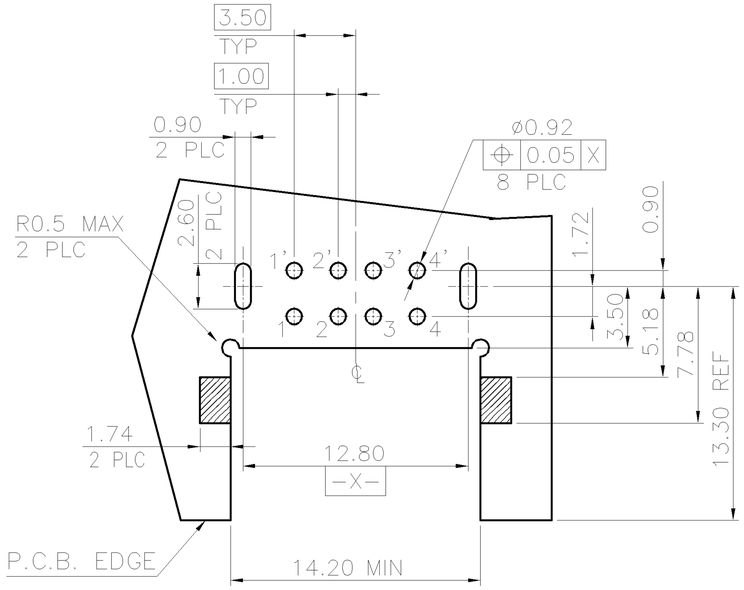

RECOMMEND P.C.B LAYOUT (THICKNESS 1.0~1.4mm)
(COMPONENT SIDE) TOLERANCE±0.05mm

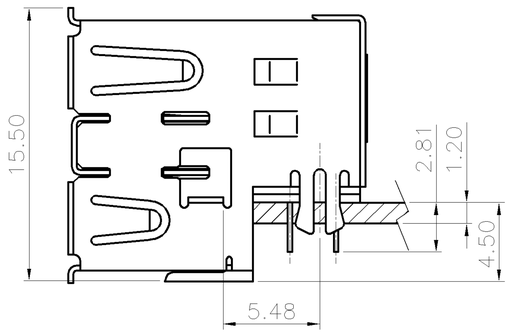

RECOMMENDED MOUNT DIMENSION

NOTES:
1. MATERIAL:
   HOUSING: PA9T WITH 30% GF, UL 94V-0 RATED, BLACK COLOR.
   SPACER: PA9T WITH 30% GF, UL 94V-0 RATED, BLACK COLOR.
   CONTACT: PHOSPHOR BRONZE.
   FRONT SHIELD: BRASS.
   REAR SHIELD: SPCC.
   GROUNDING STRIP: BRASS.
2. FINISH:
   CONTACT: 0.762μm [30μ"] MIN. GOLD PLATING ON CONTACT AREA.
   3.048μm [120μ"] MIN. BRIGHT TIN PLATING ON SOLDERTAILS.
   WITH ENTIREC CONTACT UNDERPLATED 1.27μm [50μ"] MIN. NICKEL.
   FRONT SHIELD: 0.762μm [30μ"] MIN. NICKEL PLATING.
   0.762μm [30μ"] MIN. Cu UNDER PLATING OVERALL.
   REAR SHIELD: 0.762μm [30μ"] MIN. NICKEL PLATING.
   0.762μm [30μ"] MIN. Cu UNDER PLATING OVERALL.
   GROUNDING STRIP: 0.762μm [30μ"] MIN. NICKEL PLATING.
   0.762μm [30μ"] MIN. Cu UNDER PLATING OVERALL.
3. REFLOW SOLDER CAPABLE TO 260°C PER TE SPEC 109-201, CONDITION B.

TUBE	4-1734062-1
PACKAGE	PART NUMBER

THIS DRAWING IS A CONTROLLED DOCUMENT.

DIMENSIONS: MM

TOLERANCES UNLESS OTHERWISE SPECIFIED:

0 PLC	± -
1 PLC	± 0.35
2 PLC	± 0.25
3 PLC	± -
4 PLC	± -
ANGLES	± 3°

MATERIAL: SEE NOTE

FINISH: SEE NOTE

DWN
CHK
APVD
PRODUCT SPEC
QUALIFICATION TEST REPORT
WEIGHT 4.71 GRAMS

TE Connectivity

NAME: USB CONNECTOR, A SERIES, STACKED, OFFSET TYPE

SIZE	CAGE CODE	DRAWING NO	RESTRICTED TO
A3	00779	C-1734062	—

CUSTOMER DRAWING | SCALE — | SHEET 5 OF 24 | REV G

THIS DRAWING IS UNPUBLISHED. RELEASED FOR PUBLICATION -,- .
© COPYRIGHT - BY TYCO ELECTRONICS CORPORATION. ALL RIGHTS RESERVED.

LOC	DIST
DW	—

REVISIONS

P	LTR	DESCRIPTION	DATE	DWN	APVD
		SEE SHEET 1.			

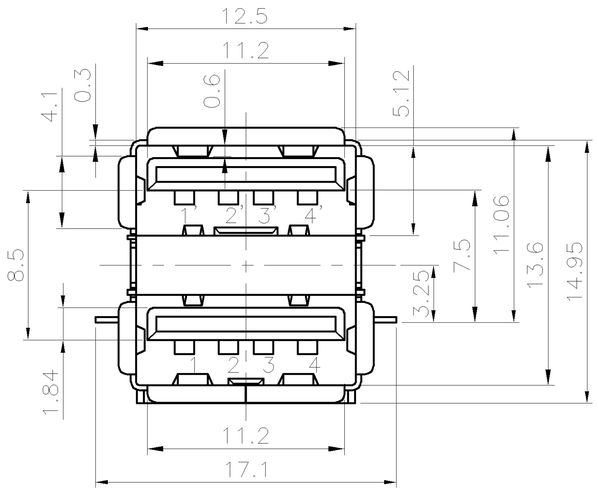

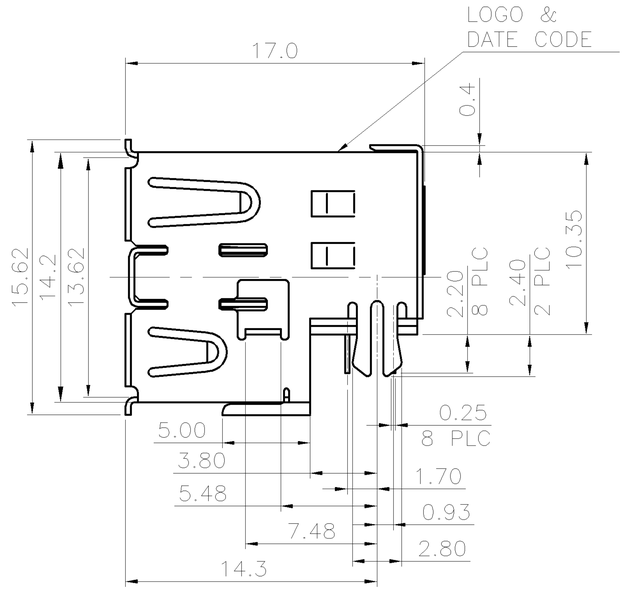

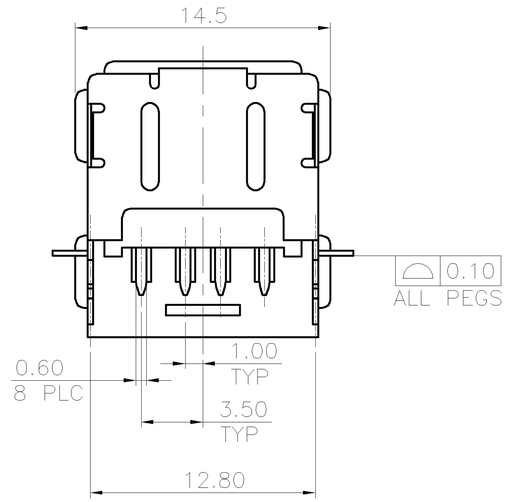

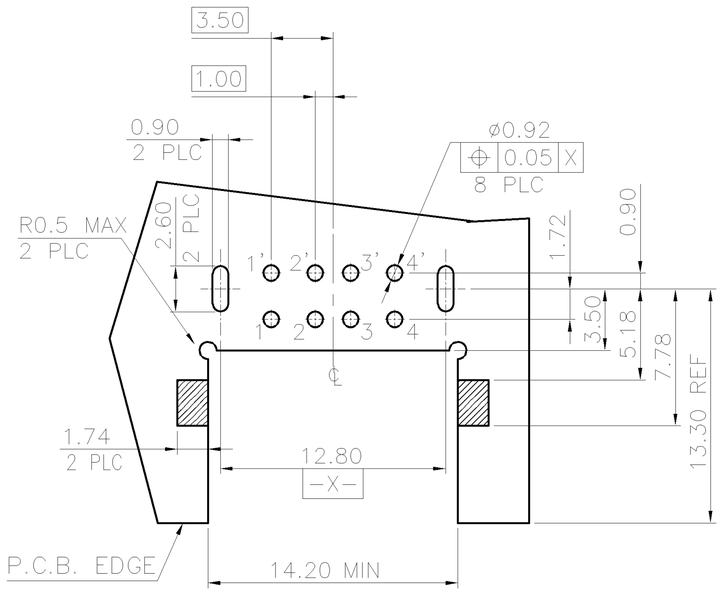

RECOMMEND P.C.B LAYOUT (THICKNESS 1.6mm)
(COMPONENT SIDE) TOLERANCE±0.05mm

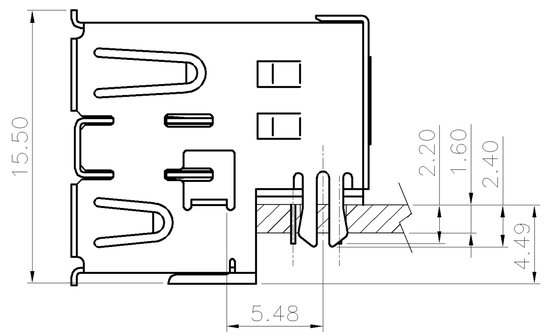

RECOMMENDED MOUNT DIMENSION

NOTES:
1. MATERIAL:
   HOUSING: PA9T WITH 30% GF, UL 94V-0 RATED, BLACK COLOR.
   SPACER: PA9T WITH 30% GF, UL 94V-0 RATED, BLACK COLOR.
   CONTACT: PHOSPHOR BRONZE.
   FRONT SHIELD: SUS.
   REAR SHIELD: SPCC.
   GROUNDING STRIP: SUS.
2. FINISH:
   CONTACT: 0.762μm [30μ"] MIN. GOLD PLATING ON CONTACT AREA.
   3.048μm [120μ"] MIN. BRIGHT TIN PLATING ON SOLDERTAILS.
   WITH ENTIREC CONTACT UNDERPLATED 1.27μm [50μ"] MIN. NICKEL.
   FRONT SHIELD: 0.762μm [30μ"] MIN. NICKEL PLATING OVERALL.
   REAR SHIELD: 0.762μm [30μ"] MIN. NICKEL PLATING.
   0.762μm [30μ"] MIN. Cu UNDER PLATING OVERALL.
3. REFLOW SOLDER CAPABLE TO 260°C PER TE SPEC 109-201, CONDITION B.

TAPE & REEL	4-1734062-2
PACKAGE	PART NUMBER

THIS DRAWING IS A CONTROLLED DOCUMENT.

DIMENSIONS: MM

TOLERANCES UNLESS OTHERWISE SPECIFIED:

0 PLC	± -
1 PLC	± 0.35
2 PLC	± 0.25
3 PLC	± -
4 PLC	± -
ANGLES	± 3°

MATERIAL: SEE NOTE

FINISH: SEE NOTE

DWN
CHK
APVD
PRODUCT SPEC
QUALIFICATION TEST REPORT
WEIGHT 4.71 GRAMS

TE Connectivity

NAME: USB CONNECTOR, A SERIES, STACKED, OFFSET TYPE

SIZE	CAGE CODE	DRAWING NO	RESTRICTED TO
A3	00779	C-1734062	—

CUSTOMER DRAWING | SCALE — | SHEET 6 OF 24 | REV G

THIS DRAWING IS UNPUBLISHED. RELEASED FOR PUBLICATION -,- .
© COPYRIGHT - BY TYCO ELECTRONICS CORPORATION. ALL RIGHTS RESERVED.

LOC	DIST
DW	—

REVISIONS

P	LTR	DESCRIPTION	DATE	DWN	APVD
		SEE SHEET 1.			

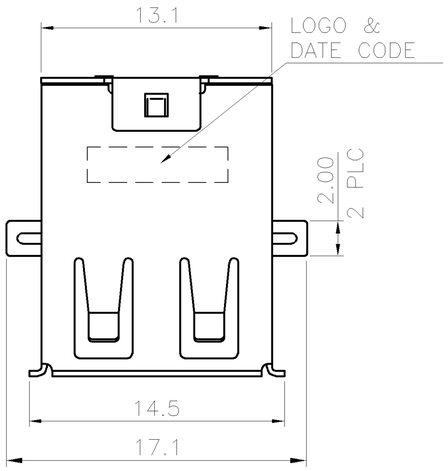

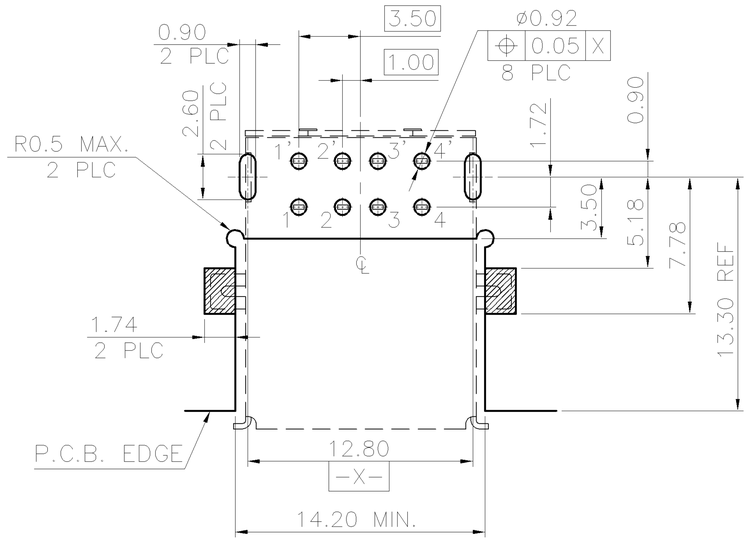

RECOMMEND P.C.B LAYOUT (THICKNESS 1.6mm)
(COMPONENT SIDE) TOLERANCE±0.05mm

NOTES:
1. MATERIAL:
   HOUSING: PA9T WITH 30% GF, UL 94V-0 RATED, BLACK COLOR.
   SPACER: PA9T WITH 30% GF, UL 94V-0 RATED, BLACK COLOR.
   CONTACT: PHOSPHOR BRONZE.
   FRONT SHIELD: SUS.
   REAR SHIELD: SPCC.
   GROUNDING STRIP: SUS.
2. FINISH:
   CONTACT: 0.762μm [30μ"] MIN. GOLD PLATING ON CONTACT AREA,
   2.540μm [100μ"] MIN. BRIGHT TIN PLATING ON SOLDERTAILS,
   WITH ENTIREC CONTACT UNDERPLATED 1.27μm [50μ"] MIN. NICKEL.
   FRONT SHIELD: 0.762μm [30μ"] MIN. NICKEL PLATING OVERALL.
   REAR SHIELD: 0.762μm [30μ"] MIN. NICKEL PLATING,
   0.762μm [30μ"] MIN. Cu UNDER PLATING OVERALL.
3. REFLOW SOLDER CAPABLE TO 260°C PER TE SPEC 109-201, CONDITION B.

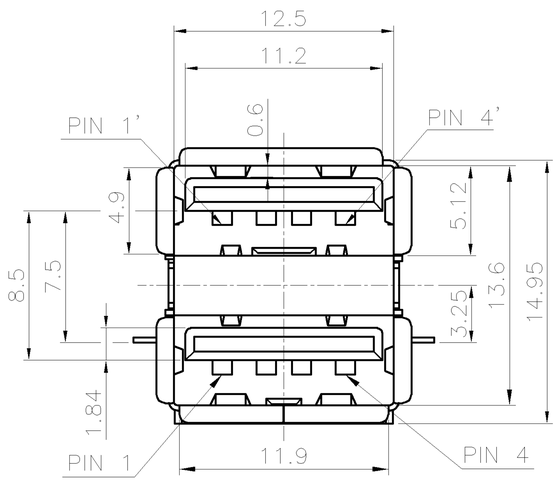

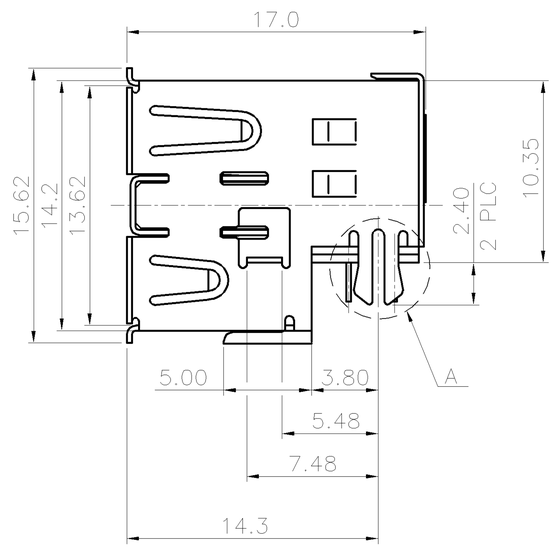

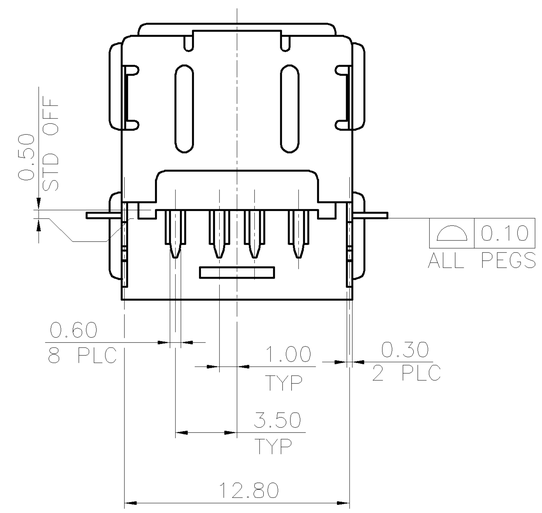

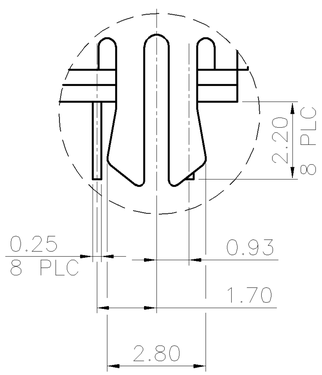

DETAIL A
SCALE 2:1

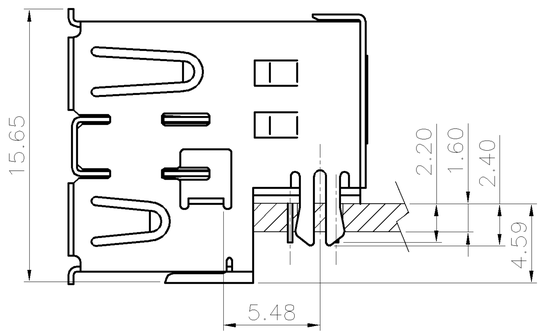

RECOMMENDED MOUNT DIMENSION

TAPE & REEL	4-1734062-3
PACKAGE	PART NUMBER

THIS DRAWING IS A CONTROLLED DOCUMENT.

DIMENSIONS: MM

TOLERANCES UNLESS OTHERWISE SPECIFIED:

0 PLC	± -
1 PLC	± 0.35
2 PLC	± 0.25
3 PLC	± -
4 PLC	± -
ANGLES	± 3°

MATERIAL: SEE NOTE

FINISH: SEE NOTE

DWN
CHK
APVD
PRODUCT SPEC
QUALIFICATION TEST REPORT
WEIGHT 4.25 GRAMS

TE Connectivity

NAME: USB CONNECTOR, A SERIES, STACKED, OFFSET TYPE

SIZE	CAGE CODE	DRAWING NO	RESTRICTED TO
A3	00779	C-1734062	—

CUSTOMER DRAWING | SCALE — | SHEET 7 OF 24 | REV G

THIS DRAWING IS UNPUBLISHED. RELEASED FOR PUBLICATION -,- .
© COPYRIGHT - BY TYCO ELECTRONICS CORPORATION. ALL RIGHTS RESERVED.

LOC	DIST
DW	—

REVISIONS

P	LTR	DESCRIPTION	DATE	DWN	APVD
		SEE SHEET 1.			

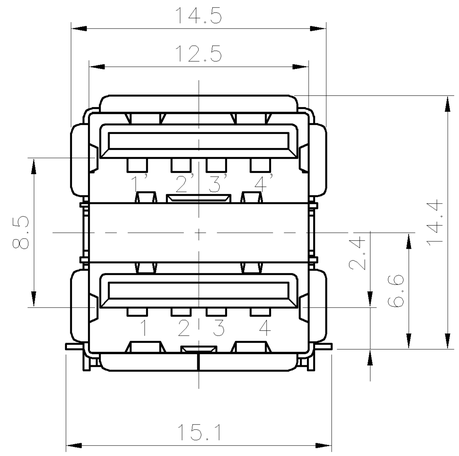

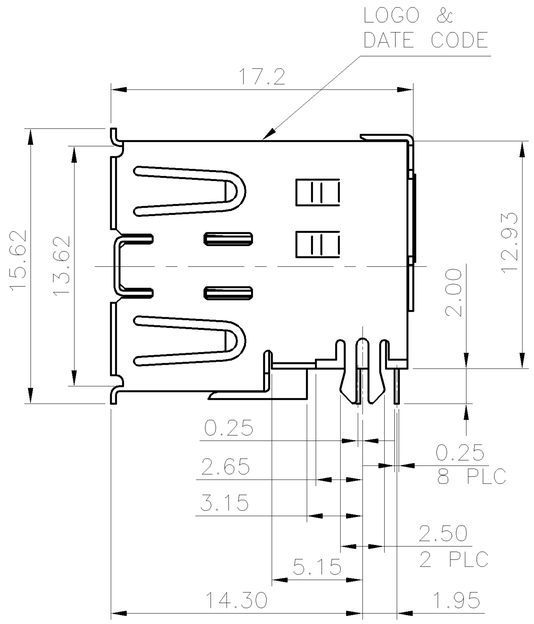

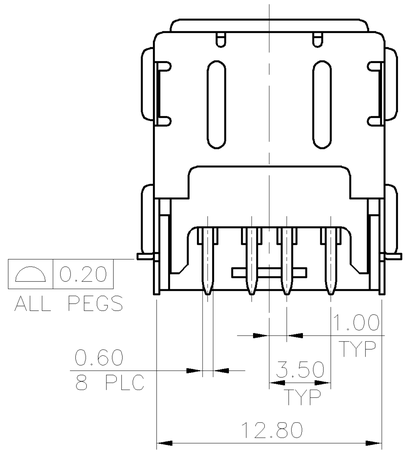

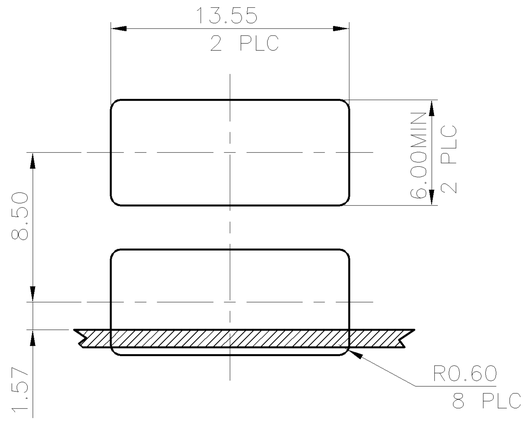

MOUNTING PANEL CUTOUT
(INTERNAL SIDE)

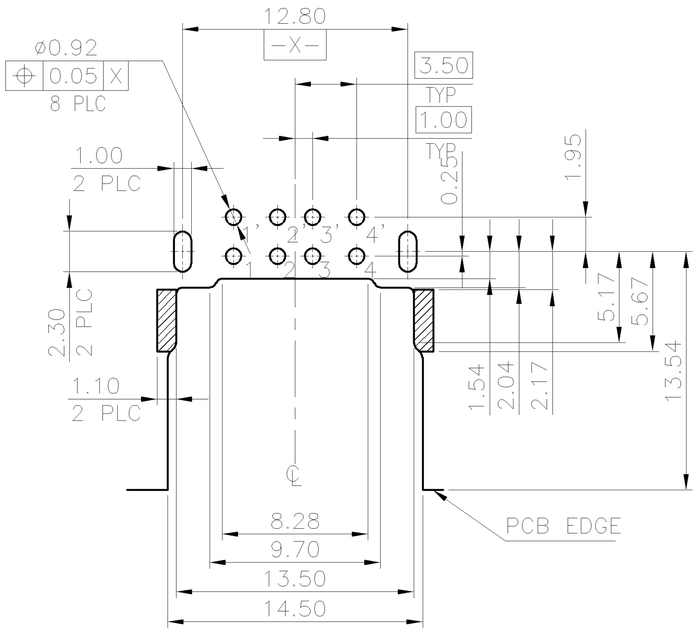

RECOMMEND P.C.B LAYOUT (THICKNESS 1.0mm)
(COMPONENT SIDE) TOLERANCE±0.05mm

NOTES:
1. MATERIAL:
   HOUSING: PA9T WITH 30% GF, UL 94V-0 RATED, BLACK COLOR.
   SPACER: PA9T WITH 30% GF, UL 94V-0 RATED, BLACK COLOR.
   CONTACT: PHOSPHOR BRONZE.
   FRONT SHIELD: BRASS.
   REAR SHIELD: SPCC.
   GROUNDING STRIP: BRASS.
2. FINISH :
   CONTACT: 0.762μm [30μ"] MIN. GOLD PLATING ON CONTACT AREA.
   3.048μm [120μ"] MIN. BRIGHT-TIN PLATING ON SOLDERTAILS.
   WITH ENTIREC CONTACT UNDERPLATED 1.27mμ" [50μ"] MIN. NICKEL.
   FRONT SHIELD: 0.762μm [30μ"] MIN. NICKEL PLATING.
   0.762μm [30μ"] MIN. Cu UNDER PLATING OVERALL.
   REAR SHIELD: 0.762μm [30μ"] MIN. NICKEL PLATING.
   0.762μm [30μ"] MIN. Cu UNDER PLATING OVERALL.
   GROUNDING STRIP: 0.762μm [30μ"] MIN. NICKEL PLATING.
   0.762μm [30μ"] MIN. Cu UNDER PLATING OVERALL.
3. REFLOW SOLDER CAPABLE TO 260°C PER TE SPEC 109-201, CONDITION B.

PACKAGE	PART NUMBER
OBSOLETE TRAY	5-1734062-2
OBSOLETE TAPE & REEL	5-1734062-1

THIS DRAWING IS A CONTROLLED DOCUMENT.

DIMENSIONS: MM

TOLERANCES UNLESS OTHERWISE SPECIFIED:

0 PLC	± -
1 PLC	± 0.35
2 PLC	± 0.25
3 PLC	± -
4 PLC	± -
ANGLES	± 3°

MATERIAL: SEE NOTE

FINISH: SEE NOTE

DWN
CHK
APVD
PRODUCT SPEC
QUALIFICATION TEST REPORT
WEIGHT 4.71 GRAMS

TE Connectivity

NAME: USB CONNECTOR, A SERIES, STACKED, OFFSET TYPE

SIZE	CAGE CODE	DRAWING NO	RESTRICTED TO
A3	00779	C-1734062	—

CUSTOMER DRAWING | SCALE — | SHEET 8 OF 24 | REV G

THIS DRAWING IS UNPUBLISHED. RELEASED FOR PUBLICATION -,- .
© COPYRIGHT - BY TYCO ELECTRONICS CORPORATION. ALL RIGHTS RESERVED.

LOC	DIST
DW	—

REVISIONS

P	LTR	DESCRIPTION	DATE	DWN	APVD
		SEE SHEET 1.			

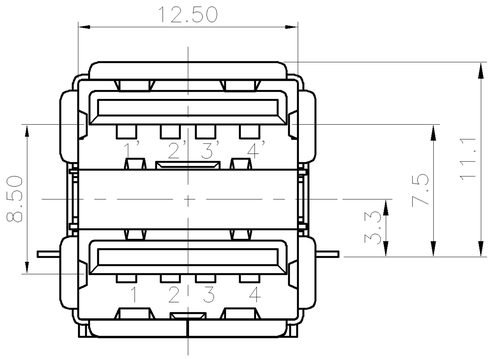

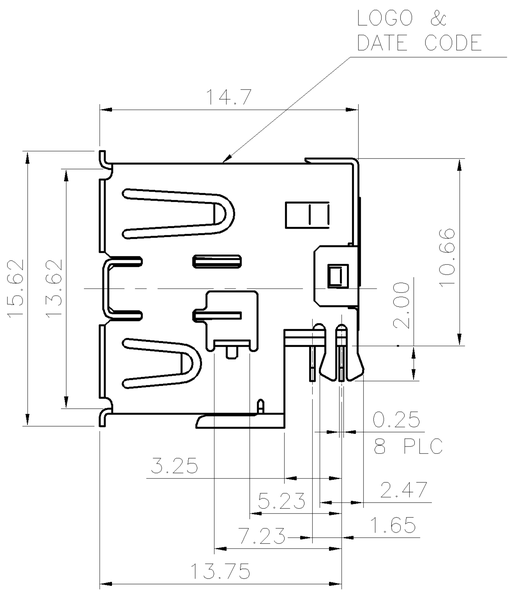

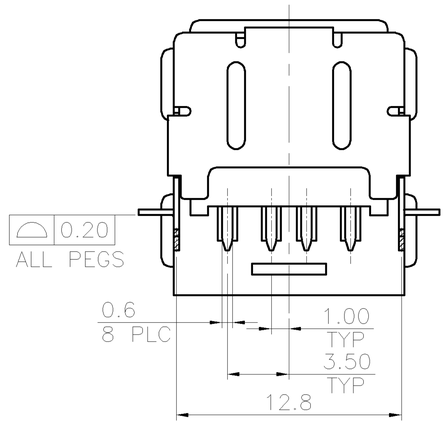

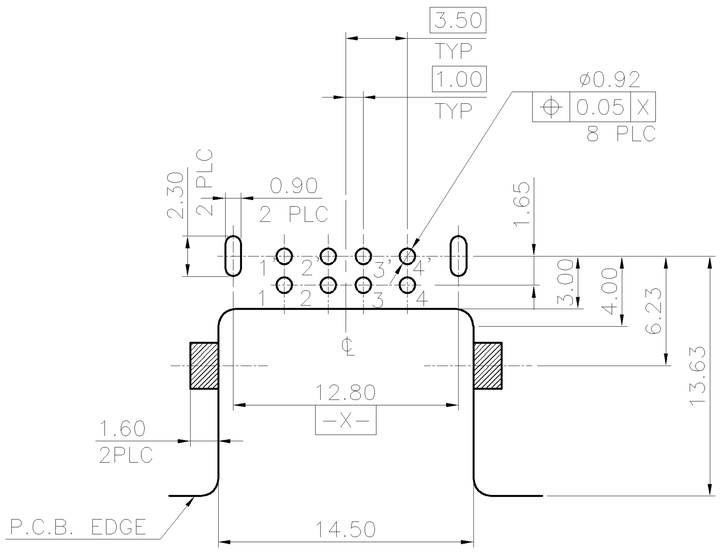

RECOMMEND P.C.B LAYOUT (THICKNESS 1.2mm)
(COMPONENT SIDE) TOLERANCE±0.05mm

NOTES:
1.MATERIAL:
HOUSING: PA9T WITH 30% GF, UL 94V-0 RATED, BLACK COLOR.
SPACER: PA9T WITH 30% GF, UL 94V-0 RATED, BLACK COLOR.
CONTACT: PHOSPHOR BRONZE.
FRONT SHELL: BRASS.
REAR SHELL: SPCC.
GROUNDING STRIP: STAINLESS.
2.FINISH:
CONTACT: 0.762μm [30μ"] MIN. GOLD PLATING ON CONTACT AREA.
3.048μm [120μ"] MIN. BRIGHT TIN PLATING ON SOLDER TAILS,
WITH ENTIREC CONTACT UNDERPLATED 1.27μm [50μ"] MIN. NICKEL.
FRONT SHELL: 0.762μm [30μ"] MIN. NICKEL PLATED.
0.762μm [30μ"] MIN. Cu UNDERPLATING OVERALL.
REAR SHELL: 0.762μm [30μ"] MIN. NICKEL PLATED.
0.762μm [30μ"] MIN. Cu UNDERPLATING OVERALL.
GROUNDING SHELL: 0.762μm [30μ"] MIN. NICKEL PLATED.
0.762μm [30μ"] MIN. Cu UNDERPLATING OVERALL.
3. REFLOW SOLDER CAPABLE TO 260°C PER TE
SPEC 109-201, CONDITION B.

TAPE & REEL	6-1734062-1
PACKAGE	PART NUMBER

THIS DRAWING IS A CONTROLLED DOCUMENT.

DIMENSIONS: MM

TOLERANCES UNLESS OTHERWISE SPECIFIED:

0 PLC	± -
1 PLC	± 0.35
2 PLC	± 0.25
3 PLC	± -
4 PLC	± -
ANGLES	± 3°

MATERIAL: SEE NOTE
FINISH: SEE NOTE

DWN
CHK
APVD
PRODUCT SPEC
QUALIFICATION TEST REPORT
WEIGHT 4.71 GRAMS
CUSTOMER DRAWING

TE Connectivity

NAME: USB CONNECTOR, A SERIES, STACKED, OFFSET TYPE

SIZE	CAGE CODE	DRAWING NO	RESTRICTED TO
A3	00779	C-1734062	—

SCALE —
SHEET 9 OF 24
REV G

THIS DRAWING IS UNPUBLISHED. RELEASED FOR PUBLICATION -,- .
© COPYRIGHT - BY TYCO ELECTRONICS CORPORATION. ALL RIGHTS RESERVED.

LOC	DIST
DW	—

REVISIONS

P	LTR	DESCRIPTION	DATE	DWN	APVD
		SEE SHEET 1.			

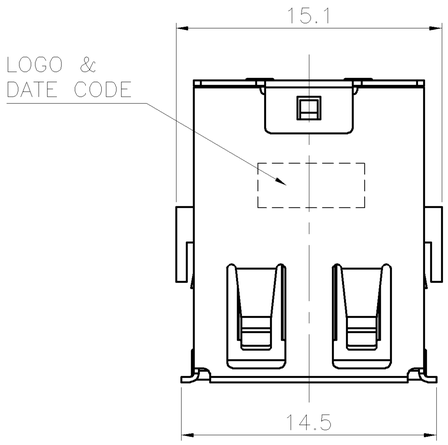

NOTES:
1. MATERIAL:
   HOUSING: PA9T WITH 30% GF, UL 94V-0 RATED, BLACK COLOR.
   CONTACT: PHOSPHOR BRONZE.
   FRONT SHIELD: BRASS.
   REAR SHIELD: SPCC.
   GROUNDING STRIP: BRASS.
2. FINISH:
   CONTACT: 0.762μm [30μ"] MIN. GOLD PLATING ON CONTACT AREA.
   3.048μm [120μ"] MIN. BRIGHT TIN PLATING ON SOLDERTAILS.
   WITH ENTIREC CONTACT UNDERPLATED 1.27μm [50μ"] MIN. NICKEL.
   FRONT SHELL: 0.762μm [30μ"] MIN. NICKEL PLATED.
   0.762μm [30μ"] MIN. Cu UNDERPLATING OVERALL.
   REAR SHELL: 0.762μm [30μ"] MIN. NICKEL PLATED.
   0.762μm [30μ"] MIN. Cu UNDERPLATING OVERALL.
   GROUNDING STRIP: 0.762μm [30μ"] MIN. NICKEL PLATING.
   0.762μm [30μ"] MIN. Cu UNDER PLATING OVERALL.
3. REFLOW SOLDER CAPABLE TO 260°C PER TE
   SPEC 109-201, CONDITION B.

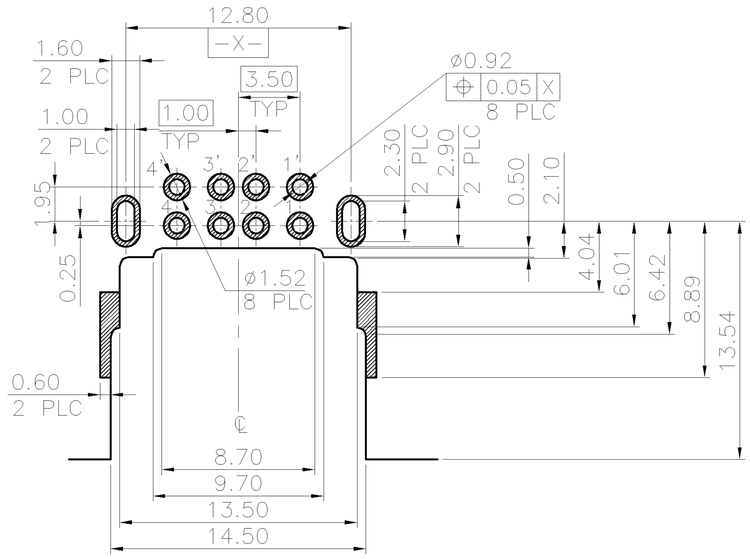

RECOMMEND P.C.B LAYOUT (THICKNESS 1.2mm)
(COMPONENT SIDE) TOLERANCE±0.05mm

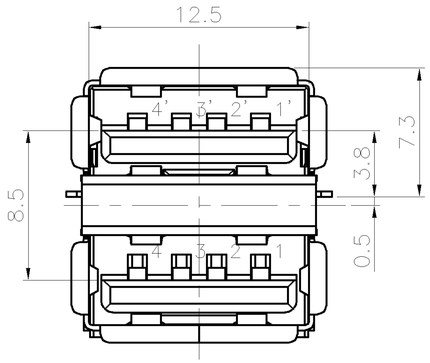

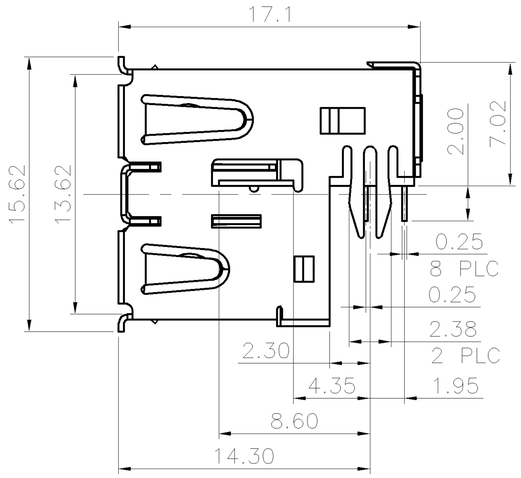

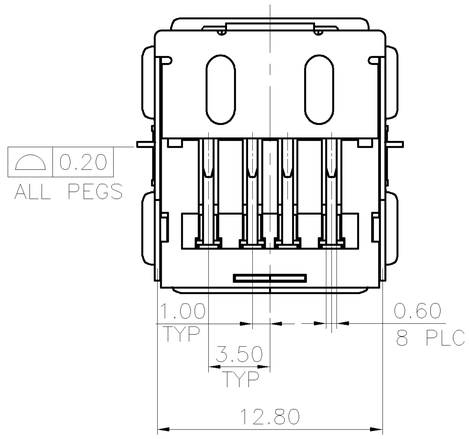

TAPE & REEL	7-1734062-1
PACKAGE	PART NUMBER

THIS DRAWING IS A CONTROLLED DOCUMENT.

DIMENSIONS: MM

TOLERANCES UNLESS OTHERWISE SPECIFIED:

0 PLC	± -
1 PLC	± 0.35
2 PLC	± 0.25
3 PLC	± -
4 PLC	± -
ANGLES	± 3°

MATERIAL: SEE NOTE

FINISH: SEE NOTE

DWN
CHK
APVD
PRODUCT SPEC
QUALIFICATION TEST REPORT
WEIGHT 4.3 GRAMS

TE Connectivity

NAME: USB CONNECTOR, A SERIES, STACKED, OFFSET TYPE

SIZE	CAGE CODE	DRAWING NO	RESTRICTED TO
A3	00779	C-1734062	—

CUSTOMER DRAWING | SCALE — | SHEET 10 OF 24 | REV G

THIS DRAWING IS UNPUBLISHED. RELEASED FOR PUBLICATION -,- .
© COPYRIGHT - BY TYCO ELECTRONICS CORPORATION. ALL RIGHTS RESERVED.

LOC	DIST
DW	—

REVISIONS

P	LTR	DESCRIPTION	DATE	DWN	APVD
		SEE SHEET 1.			

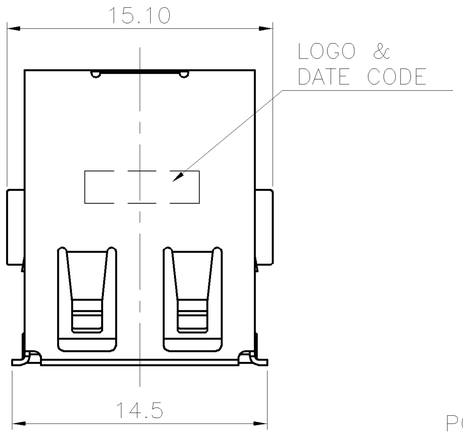

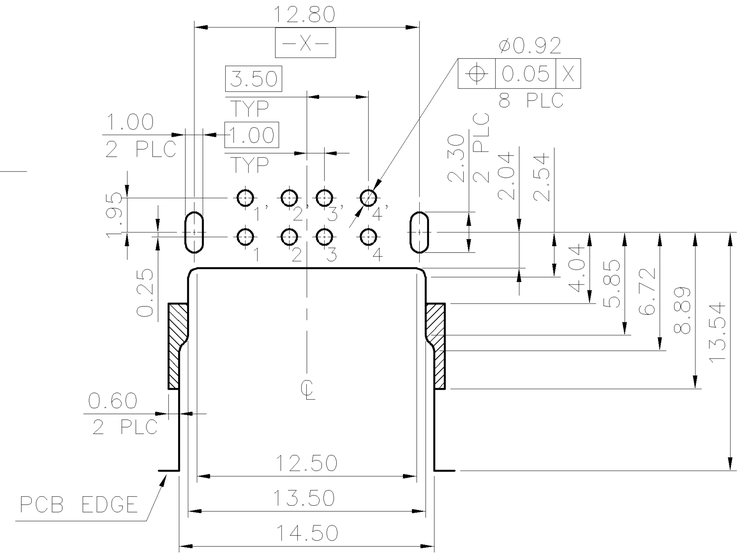

RECOMMEND P.C.B LAYOUT (THICKNESS 1.2mm)
(COMPONENT SIDE) TOLERANCE±0.05mm

NOTE:
1. MATERIAL:
   HOUSING: PA9T WITH 30% GF, UL 94V-0 RATED, BLACK COLOR.
   SPACER: PA9T WITH 30% GF, UL 94V-0 RATED, BLACK COLOR.
   CONTACT: PHOSPHOR BRONZE.
   FRONT SHIELD: BRASS.
   GROUNDING STRIP: BRASS.
2. FINISH:
   CONTACT: 0.762μm [30μ"] MIN. GOLD PLATING ON CONTACT AREA.
   3.048μm [120μ"] MIN. BRIGHT TIN PLATING ON SOLDER TAIL, WITH ENTIREC CONTACT UNDERPLATED 1.27μm [50μ"] MIN. NICKEL.
   FRONT SHELL: 0.762μm [30μ"] MIN. NICKEL PLATED.
   0.762μm [30μ"] MIN. Cu UNDERPLATING OVERALL.
   GROUNDING STRIP: 0.762μm [30μ"] MIN. NICKEL PLATING.
   0.762μm [30μ"] MIN. Cu UNDER PLATING OVERALL.
3. REFLOW SOLDER CAPABLE TO 260°C PER TE SPEC 109-201, CONDITION B.

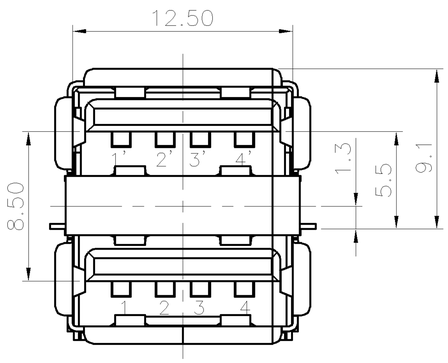

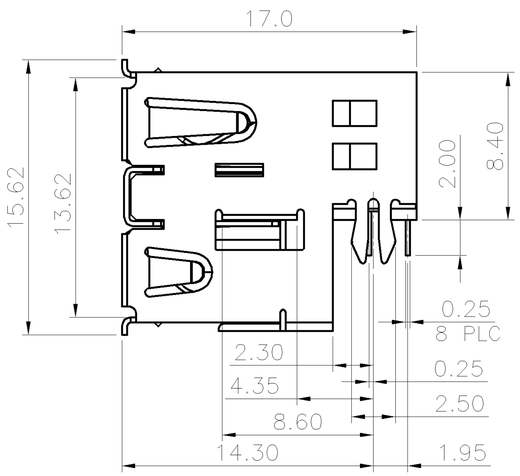

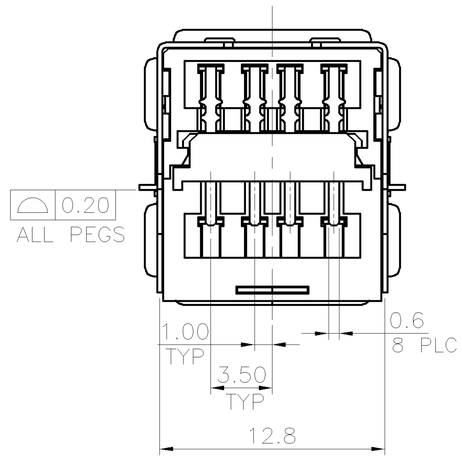

TAPE & REEL	8-1734062-1
PACKAGE	PART NUMBER

THIS DRAWING IS A CONTROLLED DOCUMENT.

DIMENSIONS: MM

TOLERANCES UNLESS OTHERWISE SPECIFIED:

0 PLC	± -
1 PLC	± 0.35
2 PLC	± 0.25
3 PLC	± -
4 PLC	± -
ANGLES	± 3°

MATERIAL: SEE NOTE

FINISH: SEE NOTE

DWN / CHK / APVD

PRODUCT SPEC

QUALIFICATION TEST REPORT

WEIGHT: 4.3 GRAMS

CUSTOMER DRAWING

TE Connectivity

NAME: USB CONNECTOR, A SERIES, STACKED, OFFSET TYPE

SIZE	CAGE CODE	DRAWING NO	RESTRICTED TO
A3	00779	C-1734062	—

SCALE	SHEET	REV
—	11 OF 24	G

THIS DRAWING IS UNPUBLISHED. RELEASED FOR PUBLICATION -,- .
© COPYRIGHT - BY TYCO ELECTRONICS CORPORATION. ALL RIGHTS RESERVED.

LOC	DIST
DW	—

REVISIONS

P	LTR	DESCRIPTION	DATE	DWN	APVD
		SEE SHEET 1.			

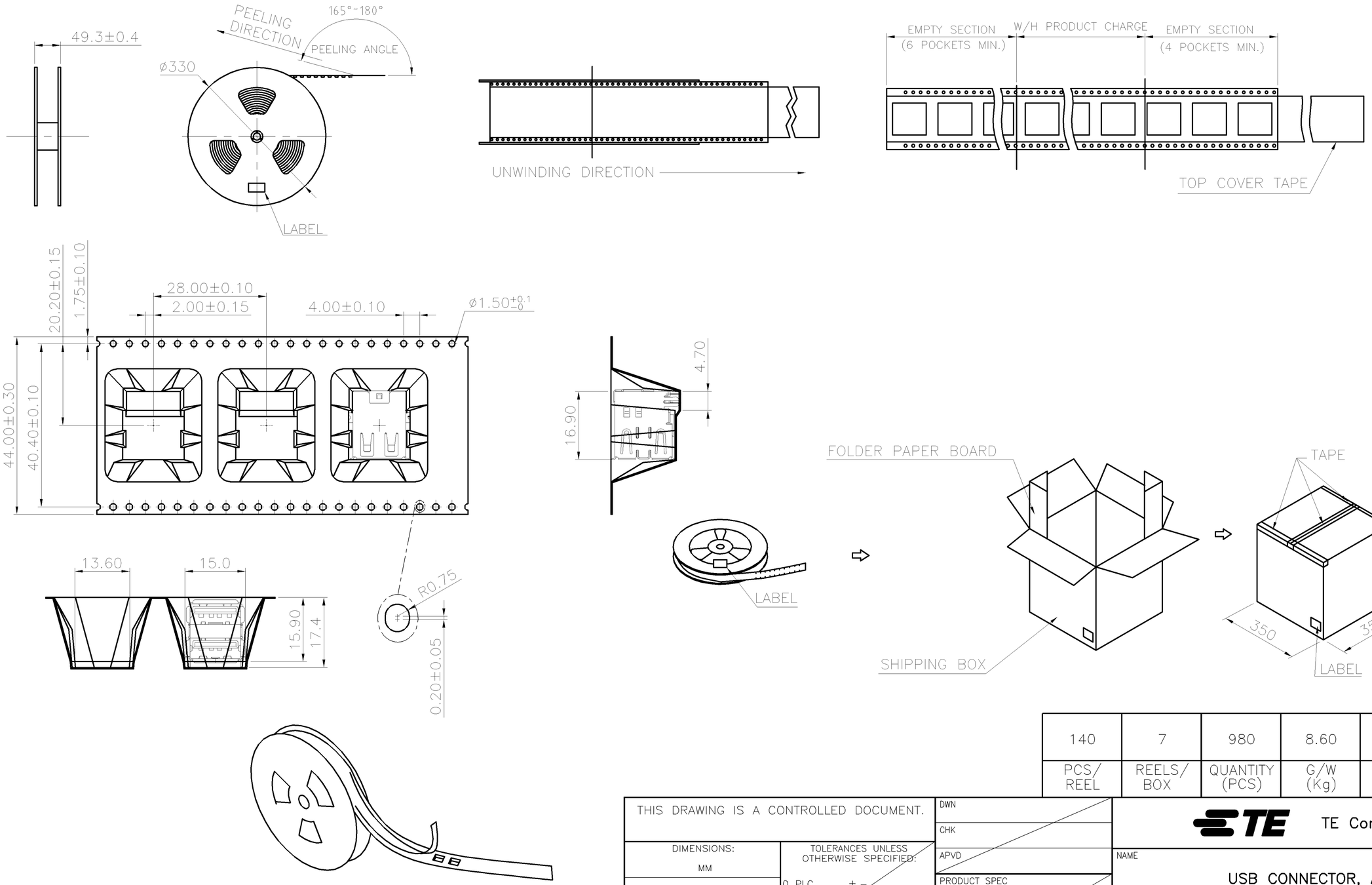

PCS/ REEL	REELS/ BOX	QUANTITY (PCS)	G/W (Kg)	N/W (Kg)	PART NUMBER
140	7	980	8.60	4.62	1-1734062-1
					1734062-1

THIS DRAWING IS A CONTROLLED DOCUMENT.

DIMENSIONS: MM

TOLERANCES UNLESS OTHERWISE SPECIFIED:
0 PLC ± -
1 PLC ± -
2 PLC ± -
3 PLC ± -
4 PLC ± -
ANGLES ± -

MATERIAL -

FINISH -

DWN
CHK
APVD
PRODUCT SPEC —
APPLICATION SPEC —
WEIGHT —

TE Connectivity

NAME
USB CONNECTOR, A SERIES, STACKED, OFFSET TYPE

SIZE	CAGE CODE	DRAWING NO	RESTRICTED TO
A3	00779	C-1734062	—

CUSTOMER DRAWING | SCALE — | SHEET 12 OF 24 | REV G

THIS DRAWING IS UNPUBLISHED. RELEASED FOR PUBLICATION – ,– .
© COPYRIGHT – BY TYCO ELECTRONICS CORPORATION. ALL RIGHTS RESERVED.

LOC	DIST
DW	—

REVISIONS

P	LTR	DESCRIPTION	DATE	DWN	APVD
		SEE SHEET 1.			

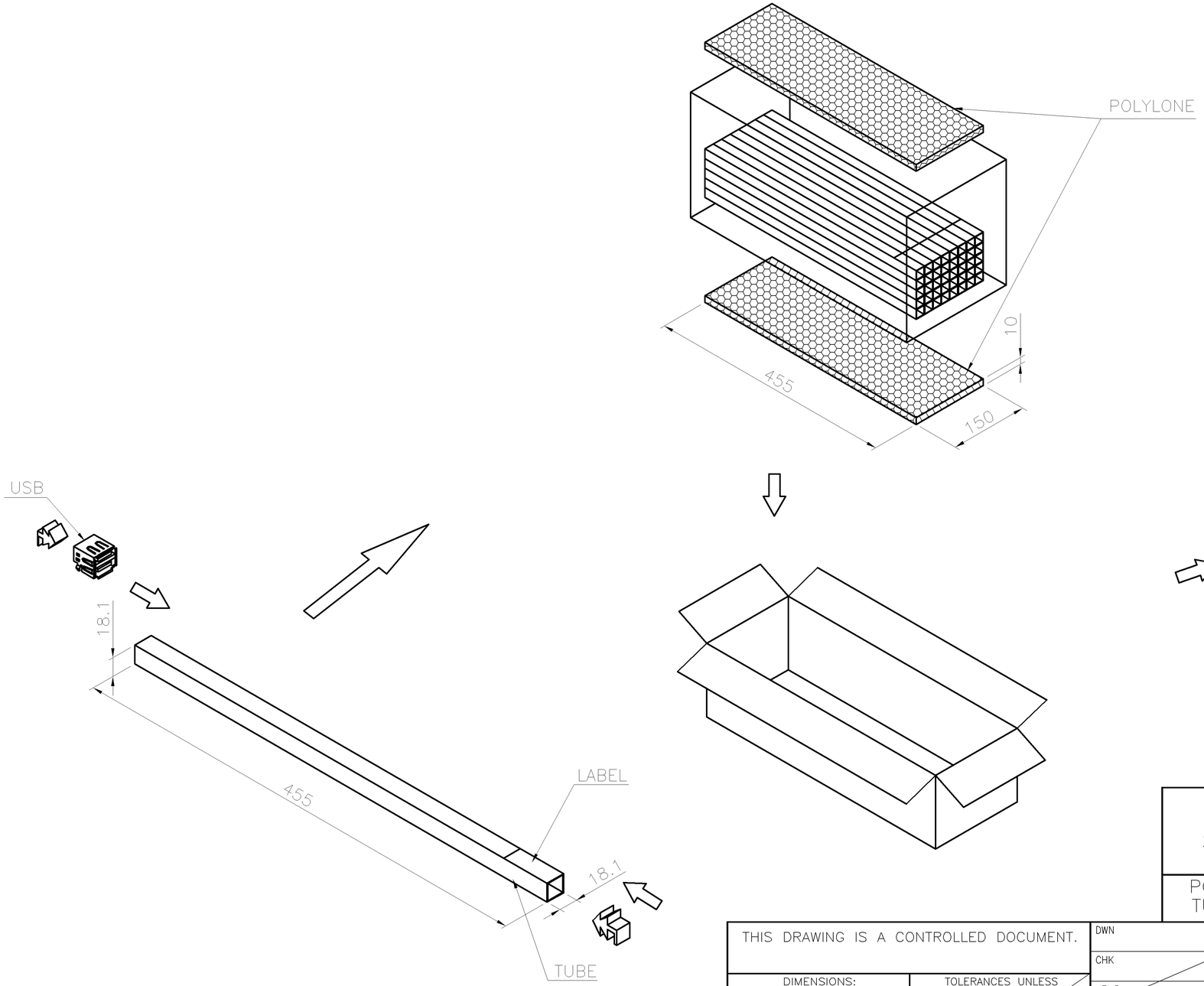

PCS/ TUBE	TUBS INNER BOX	QUANTITY (PCS)	G/W (Kg)	N/W (Kg)	PART NUMBER
24	40	960	6.10	4.52	3–1734062–2 1–1734062–2 1734062–2

THIS DRAWING IS A CONTROLLED DOCUMENT.

DIMENSIONS: MM

TOLERANCES UNLESS OTHERWISE SPECIFIED:
0 PLC ± –
1 PLC ± –
2 PLC ± –
3 PLC ± –
4 PLC ± –
ANGLES ± –

MATERIAL –

FINISH –

DWN
CHK
APVD
PRODUCT SPEC —
APPLICATION SPEC —
WEIGHT —

TE Connectivity

NAME
USB CONNECTOR, A SERIES, STACKED, OFFSET TYPE

SIZE	CAGE CODE	DRAWING NO	RESTRICTED TO
A3	00779	C–1734062	—

CUSTOMER DRAWING | SCALE — | SHEET 13 OF 24 | REV G

THIS DRAWING IS UNPUBLISHED. RELEASED FOR PUBLICATION -,- .
© COPYRIGHT - BY TYCO ELECTRONICS CORPORATION. ALL RIGHTS RESERVED.

LOC	DIST
DW	—

REVISIONS

P	LTR	DESCRIPTION	DATE	DWN	APVD
		SEE SHEET 1.			

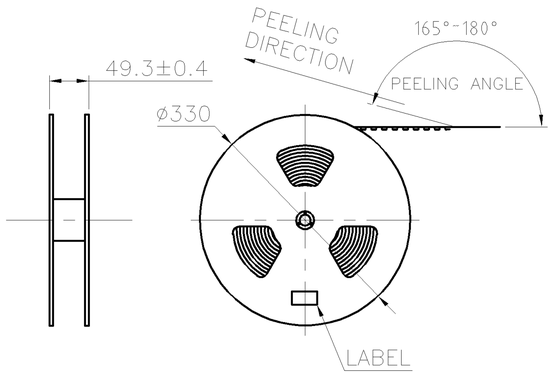

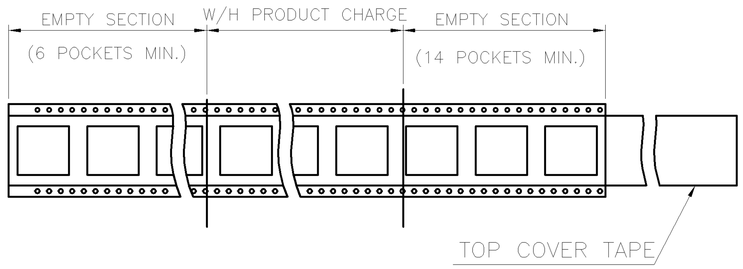

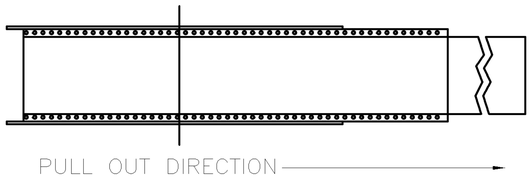

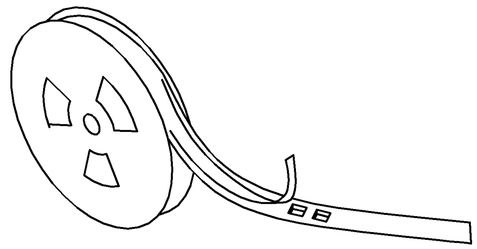

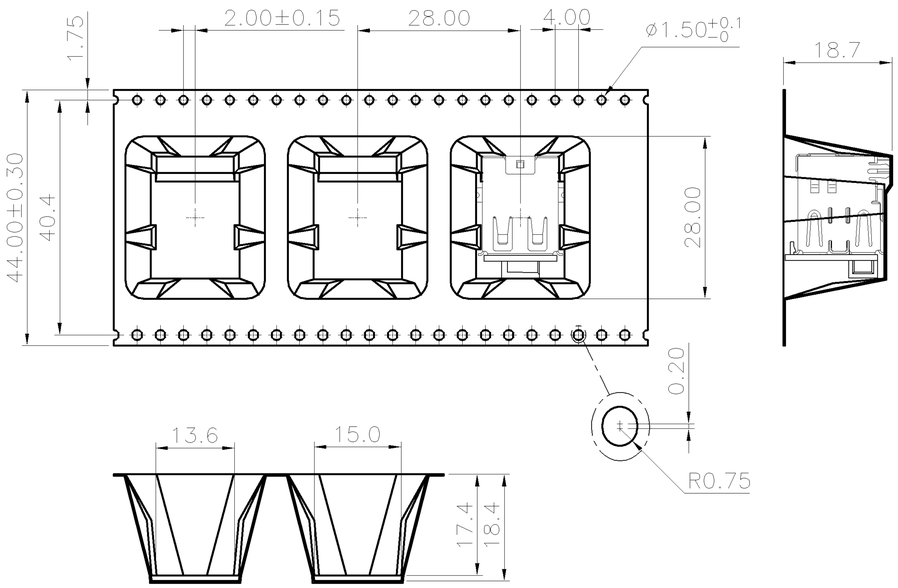

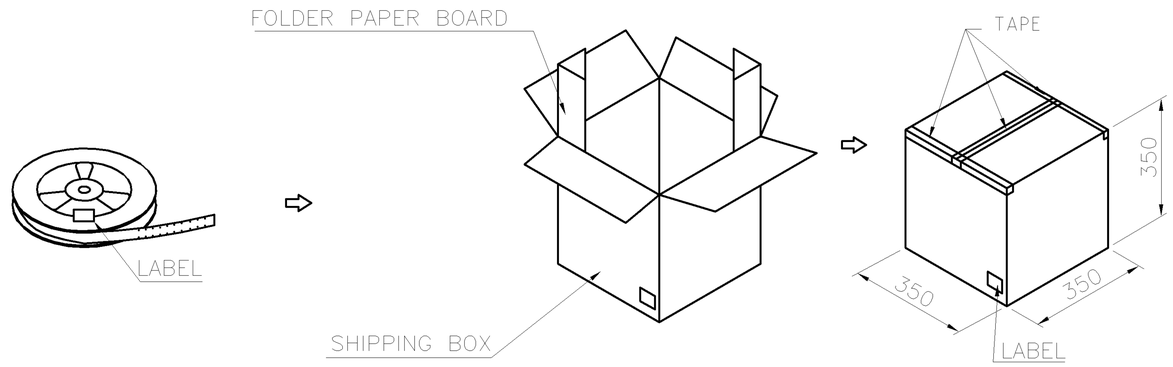

100	7	700	7.28	3.30	1734062-3
PCS/ REEL	REELS/ BOX	QUANTITY (PCS)	G/W (Kg)	N/W (Kg)	PART NUMBER

THIS DRAWING IS A CONTROLLED DOCUMENT.

DIMENSIONS: MM

TOLERANCES UNLESS OTHERWISE SPECIFIED:
0 PLC ± –
1 PLC ± –
2 PLC ± –
3 PLC ± –
4 PLC ± –
ANGLES ± –

MATERIAL –

FINISH –

DWN
CHK
APVD
PRODUCT SPEC —
APPLICATION SPEC —
WEIGHT —

TE Connectivity

NAME
USB CONNECTOR, A SERIES, STACKED, OFFSET TYPE

SIZE	CAGE CODE	DRAWING NO	RESTRICTED TO
A3	00779	C-1734062	—

CUSTOMER DRAWING | SCALE — | SHEET 14 OF 24 | REV G

THIS DRAWING IS UNPUBLISHED. RELEASED FOR PUBLICATION – ,– .
© COPYRIGHT – BY TYCO ELECTRONICS CORPORATION. ALL RIGHTS RESERVED.

LOC	DIST
DW	—

REVISIONS

P	LTR	DESCRIPTION	DATE	DWN	APVD
		SEE SHEET 1.			

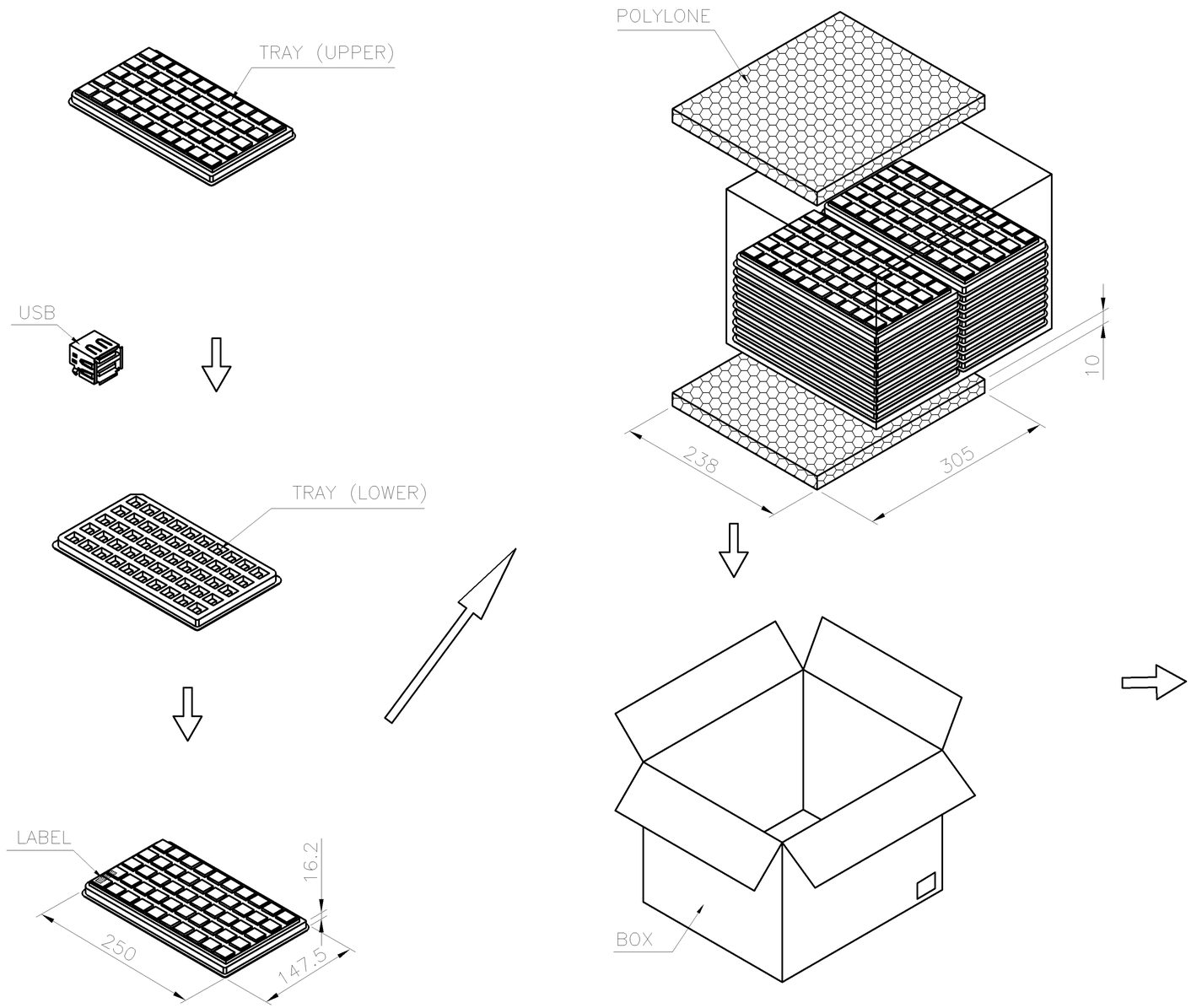

50	20	1000	6.82	4.71	2–1734062–2
PCS/ TRAY	TRAY/ BOX	QUANTITY (PCS)	G/W (Kg)	N/W (Kg)	PART NUMBER

THIS DRAWING IS A CONTROLLED DOCUMENT.

DIMENSIONS: MM

TOLERANCES UNLESS OTHERWISE SPECIFIED:
0 PLC ± –
1 PLC ± –
2 PLC ± –
3 PLC ± –
4 PLC ± –
ANGLES ± –

MATERIAL –

FINISH –

DWN
CHK
APVD
PRODUCT SPEC —
APPLICATION SPEC —
WEIGHT —

TE Connectivity

NAME
USB CONNECTOR, A SERIES, STACKED, OFFSET TYPE

SIZE	CAGE CODE	DRAWING NO	RESTRICTED TO
A3	00779	C–1734062	—

CUSTOMER DRAWING | SCALE — | SHEET 15 OF 24 | REV G

THIS DRAWING IS UNPUBLISHED. RELEASED FOR PUBLICATION – ,– .
© COPYRIGHT – BY TYCO ELECTRONICS CORPORATION. ALL RIGHTS RESERVED.

LOC	DIST
DW	—

REVISIONS

P	LTR	DESCRIPTION	DATE	DWN	APVD
		SEE SHEET 1.			

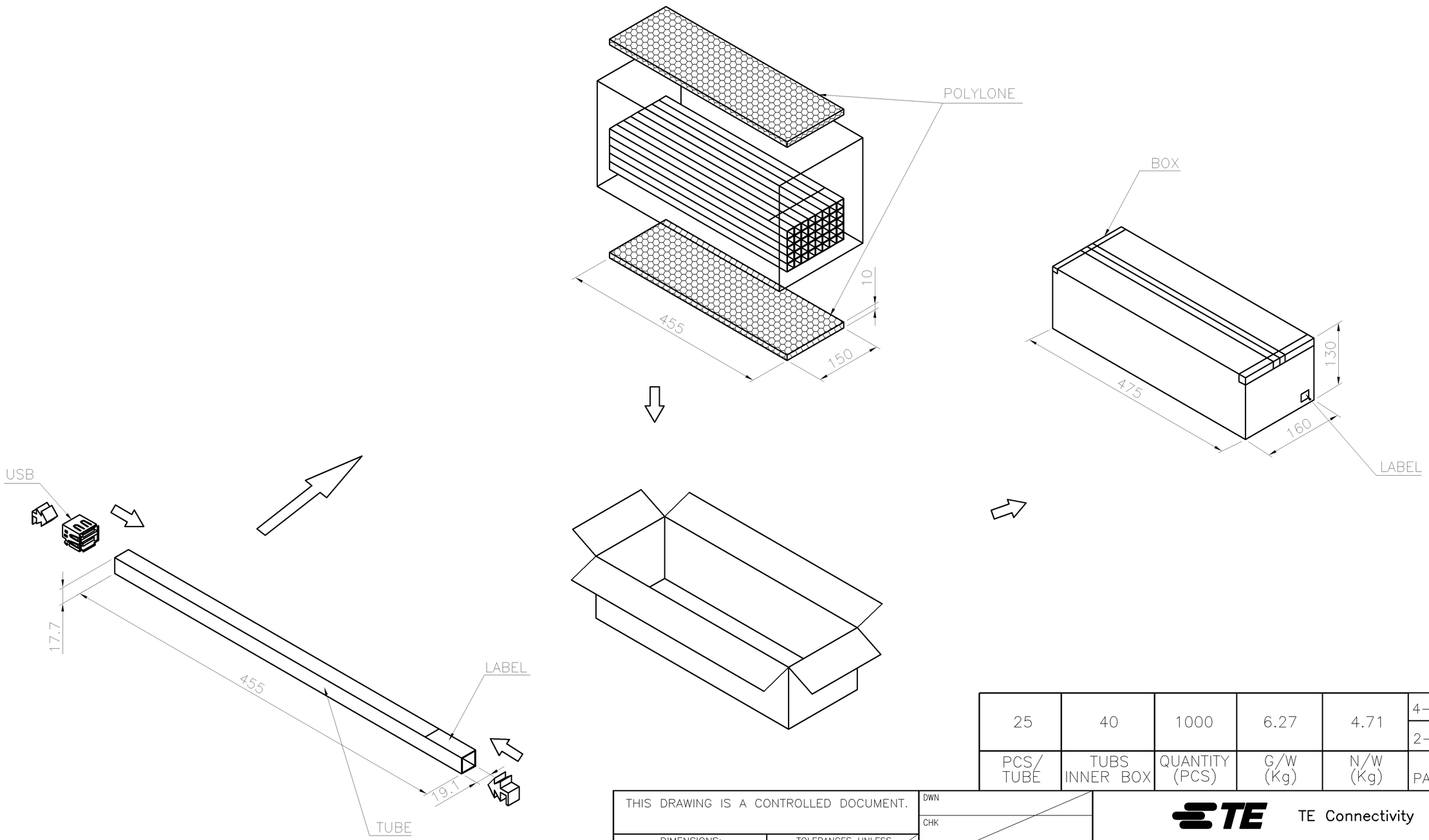

PCS/ TUBE	TUBS INNER BOX	QUANTITY (PCS)	G/W (Kg)	N/W (Kg)	PART NUMBER
25	40	1000	6.27	4.71	4–1734062–1 2–1734062–1

THIS DRAWING IS A CONTROLLED DOCUMENT.

DIMENSIONS: MM

TOLERANCES UNLESS OTHERWISE SPECIFIED:
0 PLC ± –
1 PLC ± –
2 PLC ± –
3 PLC ± –
4 PLC ± –
ANGLES ± –

MATERIAL –

FINISH –

DWN
CHK
APVD
PRODUCT SPEC —
APPLICATION SPEC —
WEIGHT —

TE Connectivity

NAME
USB CONNECTOR, A SERIES, STACKED, OFFSET TYPE

SIZE	CAGE CODE	DRAWING NO	RESTRICTED TO
A3	00779	C–1734062	—

CUSTOMER DRAWING | SCALE — | SHEET 16 OF 24 | REV G

THIS DRAWING IS UNPUBLISHED. RELEASED FOR PUBLICATION – –, .
© COPYRIGHT – BY TYCO ELECTRONICS CORPORATION. ALL RIGHTS RESERVED.

LOC	DIST
DW	—

REVISIONS

P	LTR	DESCRIPTION	DATE	DWN	APVD
		SEE SHEET 1.			

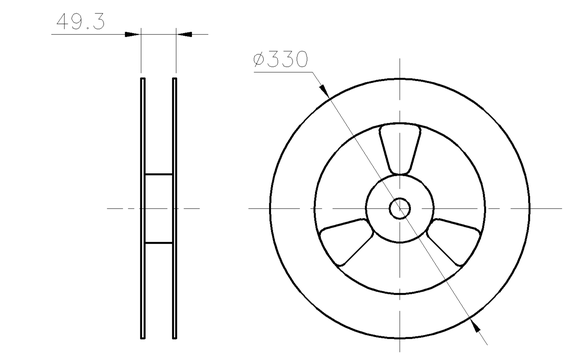

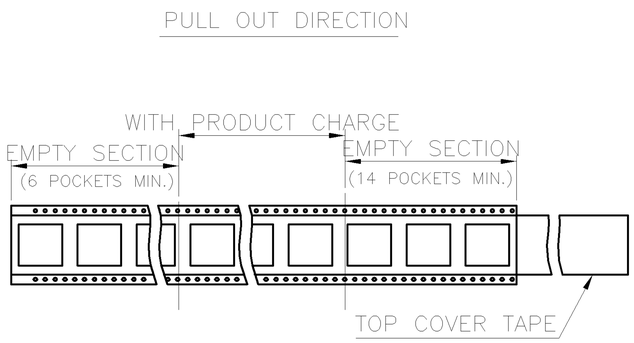

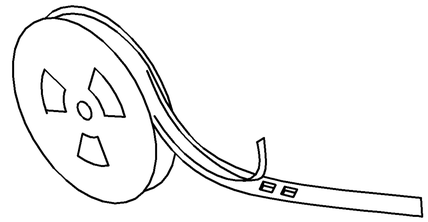

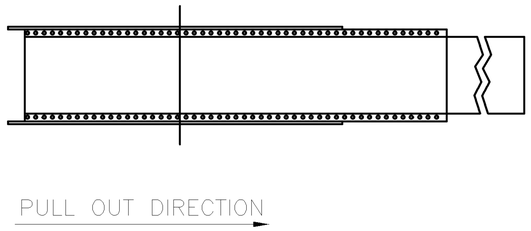

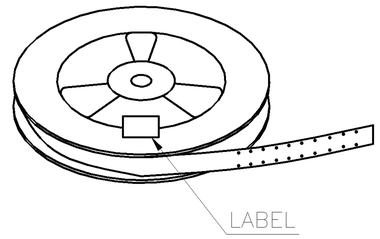

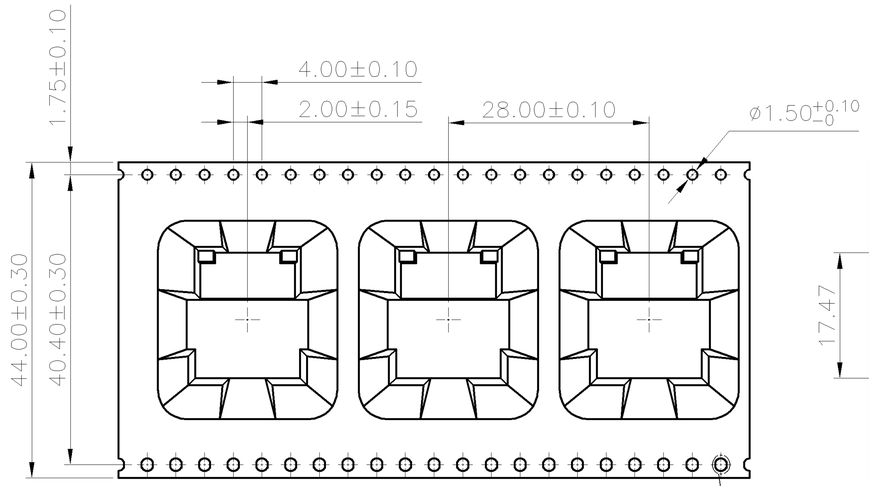

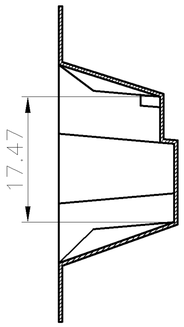

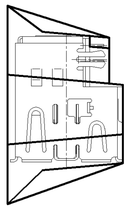

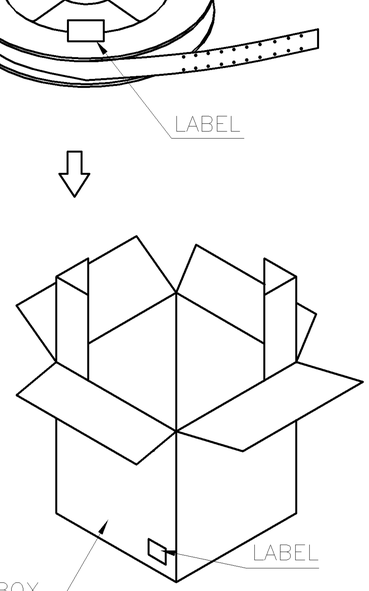

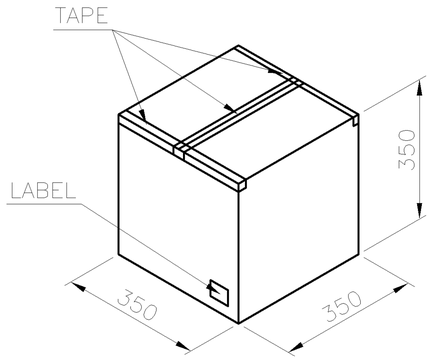

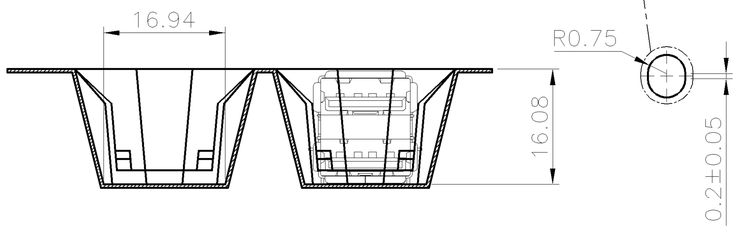

PCS/ REEL	REELS/ BOX	QUANTITY (PCS)	G/W (Kg)	N/W (Kg)	PART NUMBER
120	7	840	9.05	3.96	3–1734062–4
					3–1734062–3

THIS DRAWING IS A CONTROLLED DOCUMENT.

DIMENSIONS: MM

TOLERANCES UNLESS OTHERWISE SPECIFIED:
0 PLC ± –
1 PLC ± –
2 PLC ± –
3 PLC ± –
4 PLC ± –
ANGLES ± –

MATERIAL –

FINISH –

DWN
CHK
APVD
PRODUCT SPEC —
APPLICATION SPEC —
WEIGHT —

TE Connectivity

NAME
USB CONNECTOR, A SERIES, STACKED, OFFSET TYPE

SIZE	CAGE CODE	DRAWING NO	RESTRICTED TO
A3	00779	C–1734062	—

CUSTOMER DRAWING | SCALE — | SHEET 17 OF 24 | REV G

THIS DRAWING IS UNPUBLISHED. RELEASED FOR PUBLICATION – ,– .
© COPYRIGHT – BY TYCO ELECTRONICS CORPORATION. ALL RIGHTS RESERVED.

LOC	DIST
DW	—

REVISIONS

P	LTR	DESCRIPTION	DATE	DWN	APVD
		SEE SHEET 1.			

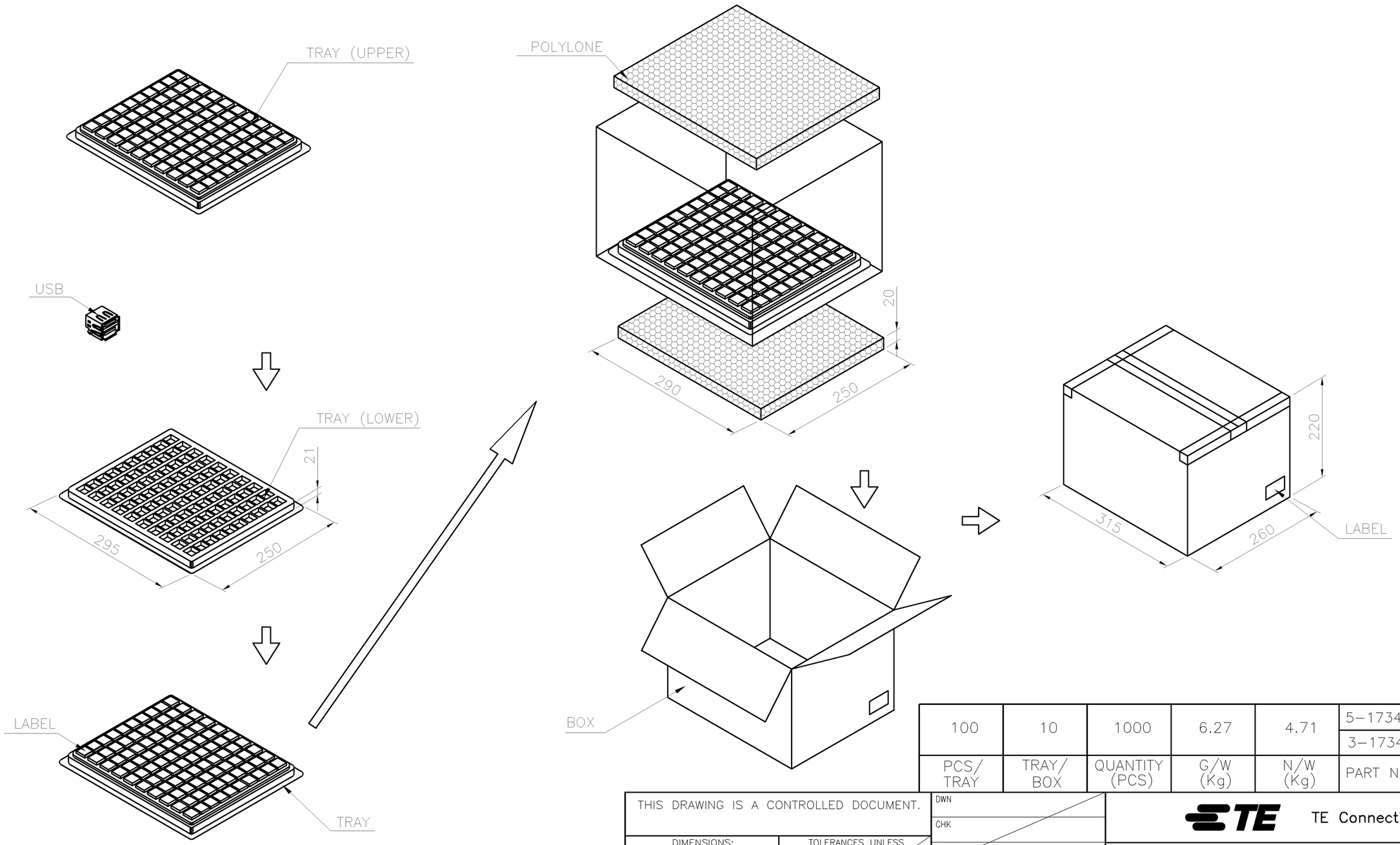

PCS/ TRAY	TRAY/ BOX	QUANTITY (PCS)	G/W (Kg)	N/W (Kg)	PART NUMBER	
100	10	1000	6.27	4.71	5–1734062–2	OBSOLETE
					3–1734062–1	

THIS DRAWING IS A CONTROLLED DOCUMENT.

DIMENSIONS: MM

TOLERANCES UNLESS OTHERWISE SPECIFIED:

0 PLC	± –
1 PLC	± –
2 PLC	± –
3 PLC	± –
4 PLC	± –
ANGLES	± –

MATERIAL –

FINISH –

DWN

CHK

APVD

PRODUCT SPEC —

APPLICATION SPEC —

WEIGHT —

TE Connectivity

NAME

USB CONNECTOR, A SERIES, STACKED, OFFSET TYPE

SIZE	CAGE CODE	DRAWING NO	RESTRICTED TO
A3	00779	C–1734062	—

CUSTOMER DRAWING | SCALE — | SHEET 18 OF 24 | REV G

THIS DRAWING IS UNPUBLISHED. RELEASED FOR PUBLICATION -,- .
© COPYRIGHT - BY TYCO ELECTRONICS CORPORATION. ALL RIGHTS RESERVED.

LOC	DIST
DW	—

REVISIONS

P	LTR	DESCRIPTION	DATE	DWN	APVD
		SEE SHEET 1.			

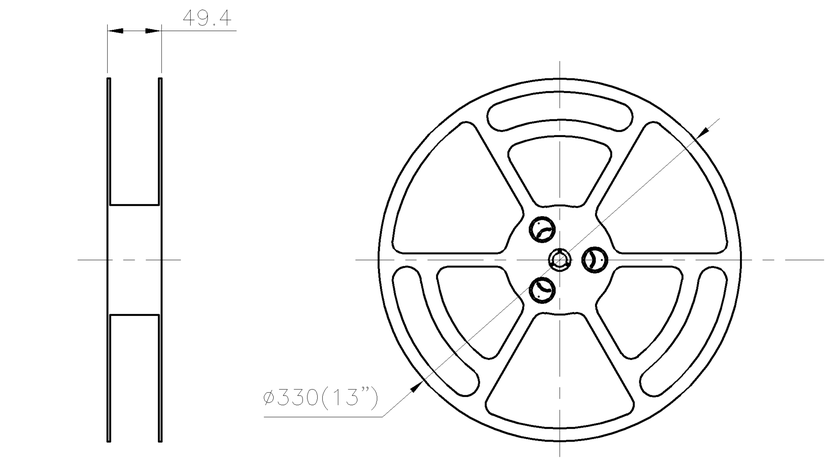

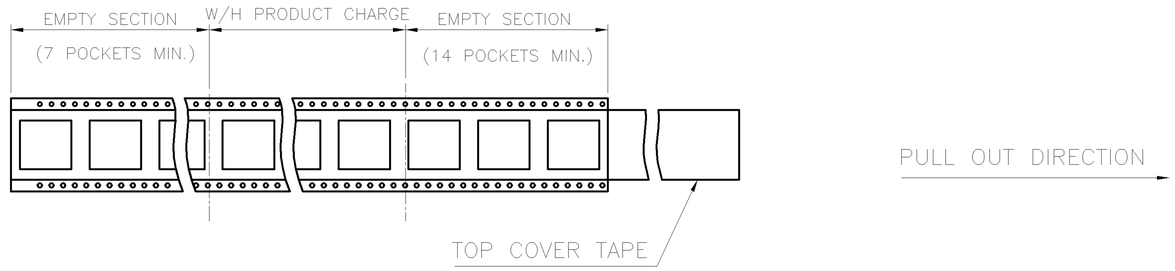

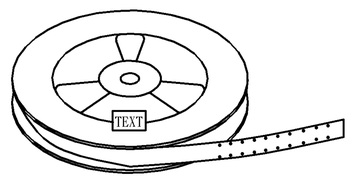

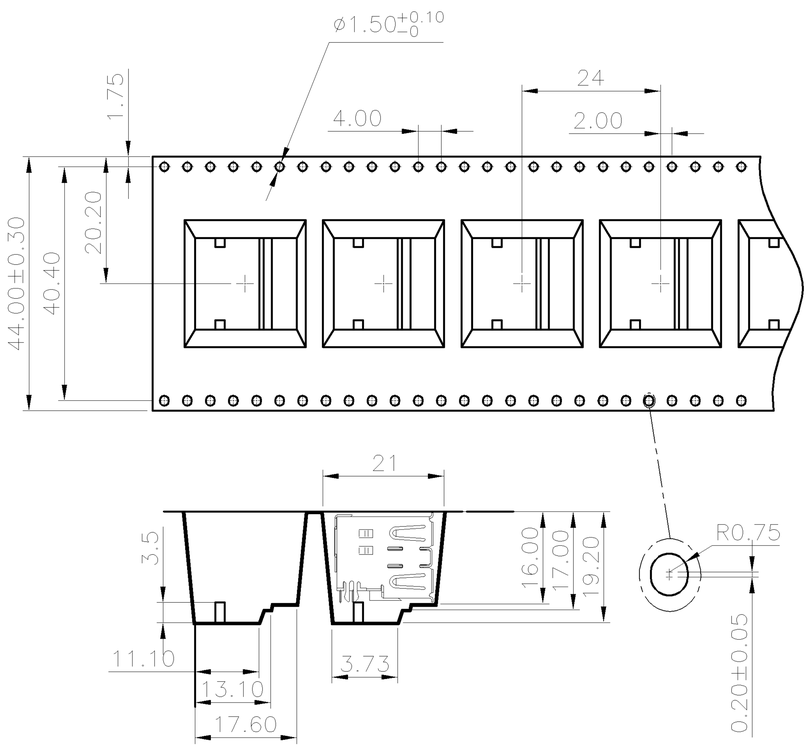

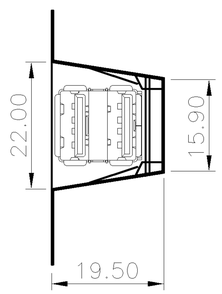

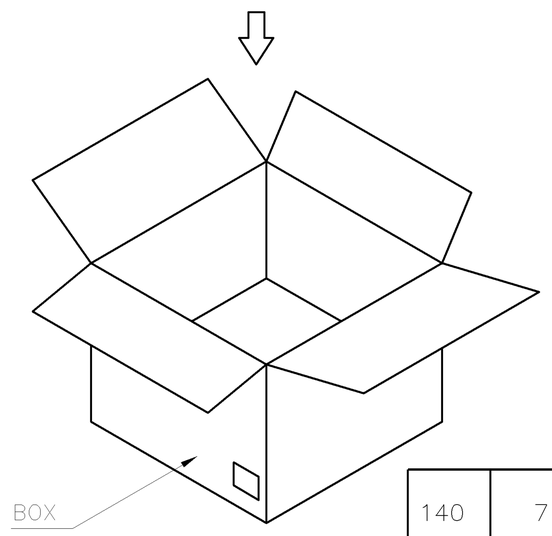

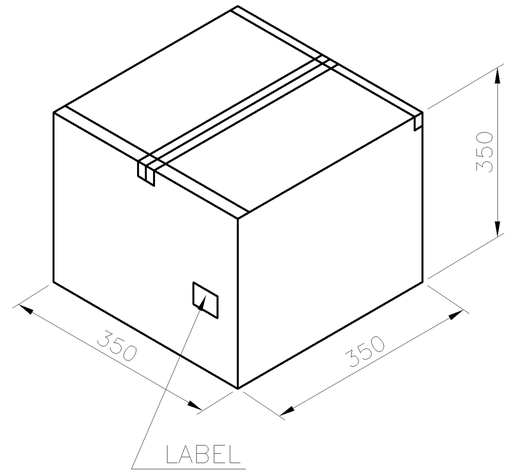

PCS/ REEL	REELS/ BOX	QUANTITY (PCS)	G/W (Kg)	N/W (Kg)	PART NUMBER	
140	7	980	8.60	4.62	5-1734062-1	OBSOLETE

THIS DRAWING IS A CONTROLLED DOCUMENT.

DIMENSIONS: MM

TOLERANCES UNLESS OTHERWISE SPECIFIED:
0 PLC ± -
1 PLC ± -
2 PLC ± -
3 PLC ± -
4 PLC ± -
ANGLES ± -

MATERIAL -

FINISH -

DWN
CHK
APVD
PRODUCT SPEC —
APPLICATION SPEC —
WEIGHT —

TE Connectivity

NAME
USB CONNECTOR, A SERIES, STACKED, OFFSET TYPE

SIZE	CAGE CODE	DRAWING NO	RESTRICTED TO
A3	00779	C-1734062	—

CUSTOMER DRAWING | SCALE — | SHEET 19 OF 24 | REV G

THIS DRAWING IS UNPUBLISHED. RELEASED FOR PUBLICATION -,- .
© COPYRIGHT - BY TYCO ELECTRONICS CORPORATION. ALL RIGHTS RESERVED.

LOC	DIST
DW	—

REVISIONS

P	LTR	DESCRIPTION	DATE	DWN	APVD
		SEE SHEET 1.			

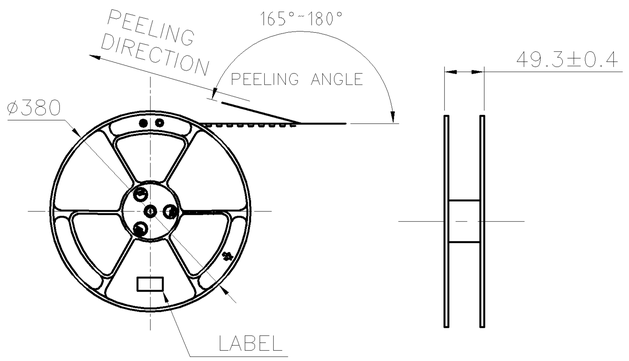

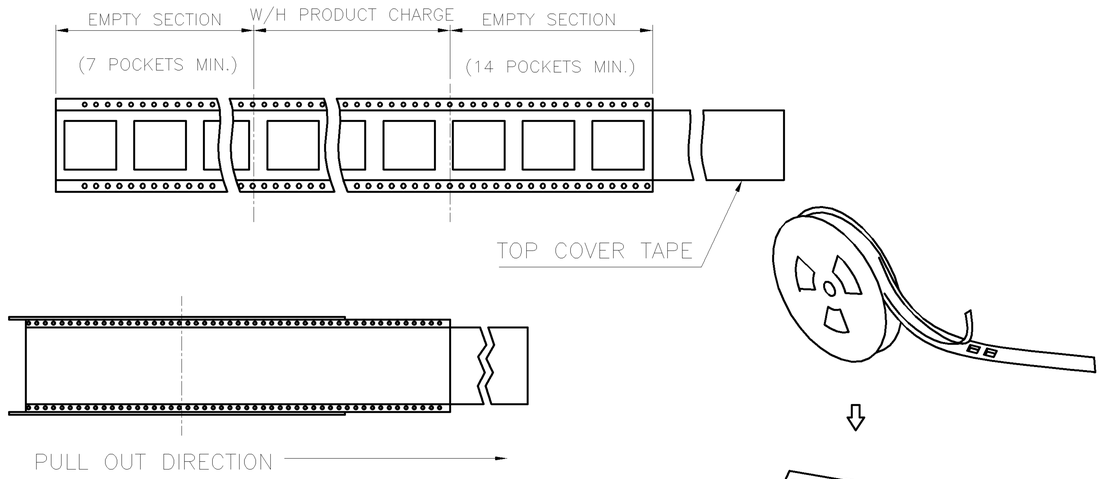

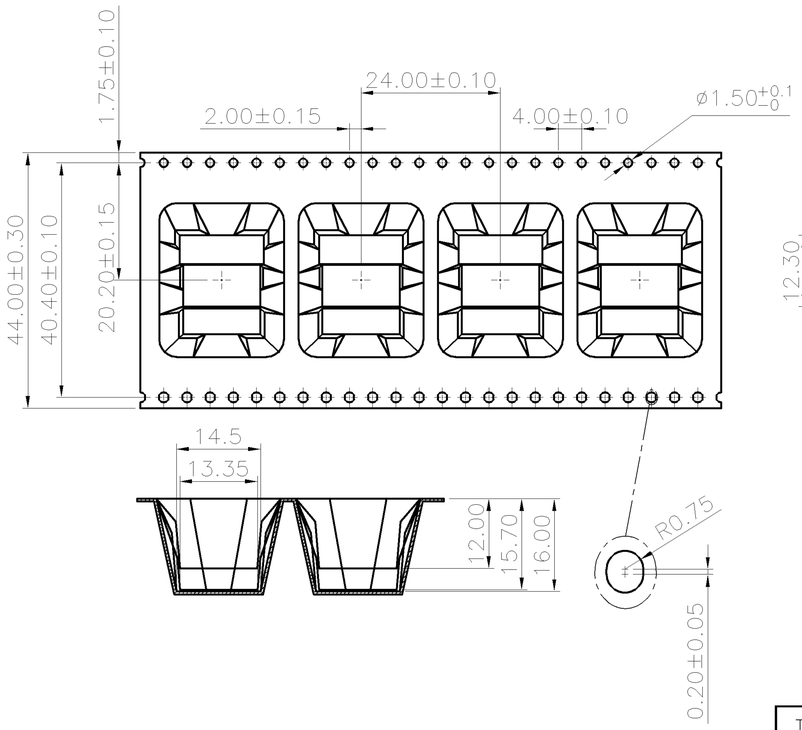

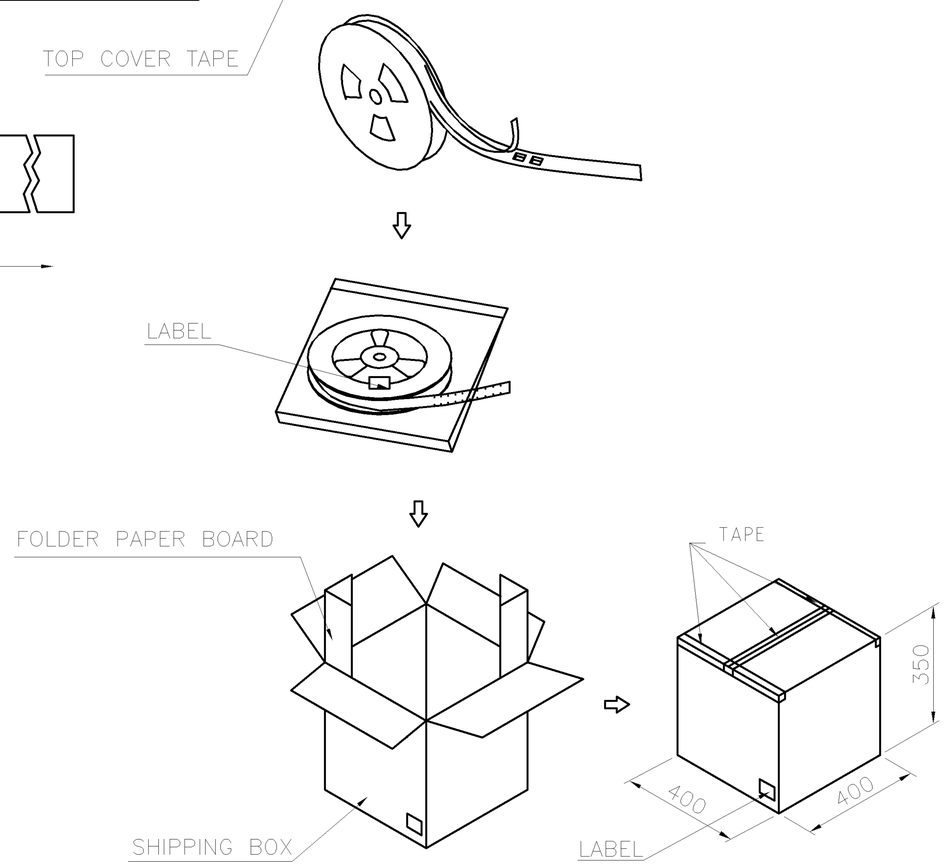

11.20 Kg	6.10 Kg	200	7	1400 PCS	4-1734062-2
GROSS WEIGHT	NET WEIGHT	PCS/REEL	REELS /CARTON	QUANTITY	PART NUMBER

THIS DRAWING IS A CONTROLLED DOCUMENT.

DIMENSIONS: MM

TOLERANCES UNLESS OTHERWISE SPECIFIED:
0 PLC ± –
1 PLC ± –
2 PLC ± –
3 PLC ± –
4 PLC ± –
ANGLES ± –

MATERIAL –

FINISH –

DWN
CHK
APVD
PRODUCT SPEC —
APPLICATION SPEC —
WEIGHT —

TE Connectivity

NAME
USB CONNECTOR, A SERIES, STACKED, OFFSET TYPE

SIZE	CAGE CODE	DRAWING NO	RESTRICTED TO
A3	00779	C-1734062	—

CUSTOMER DRAWING | SCALE — | SHEET 20 OF 24 | REV G

THIS DRAWING IS UNPUBLISHED. RELEASED FOR PUBLICATION -,- .
© COPYRIGHT - BY TYCO ELECTRONICS CORPORATION. ALL RIGHTS RESERVED.

LOC	DIST
DW	—

REVISIONS

P	LTR	DESCRIPTION	DATE	DWN	APVD
		SEE SHEET 1.			

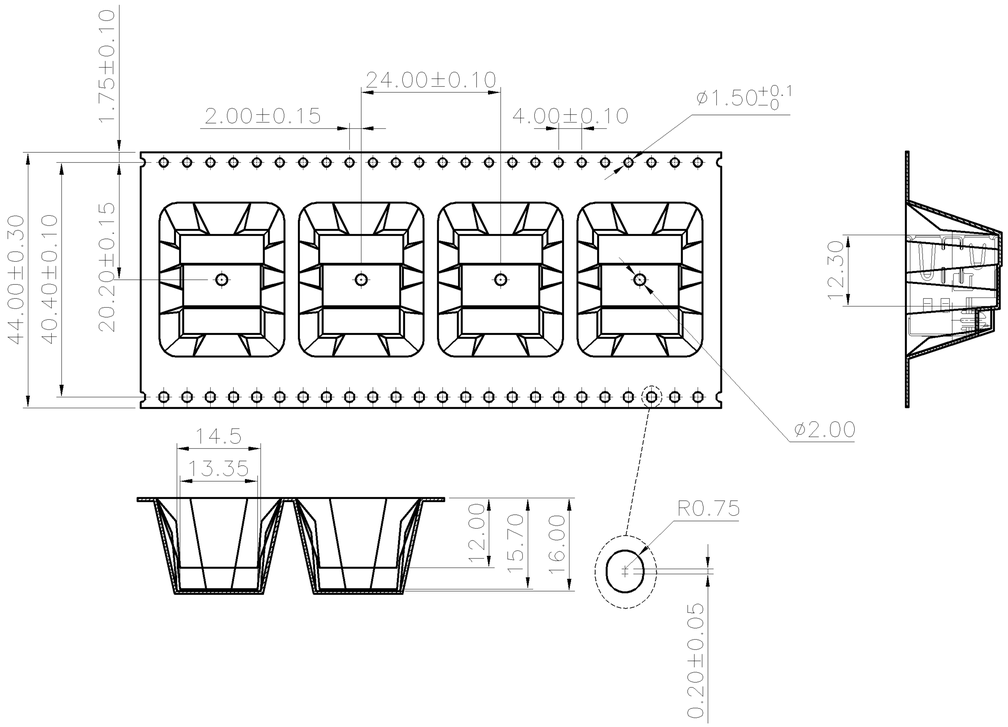

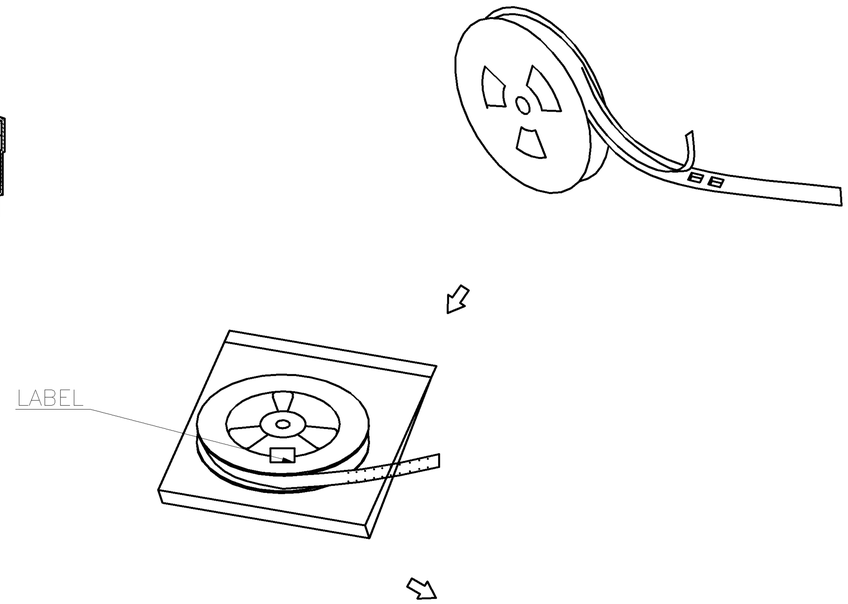

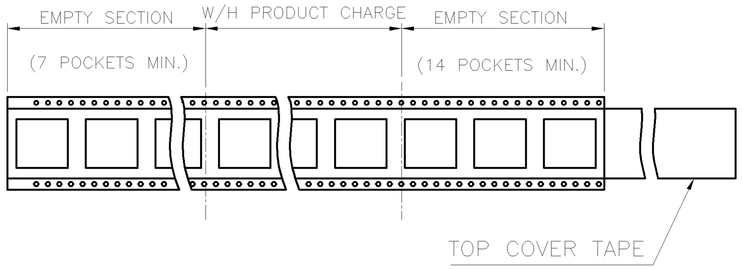

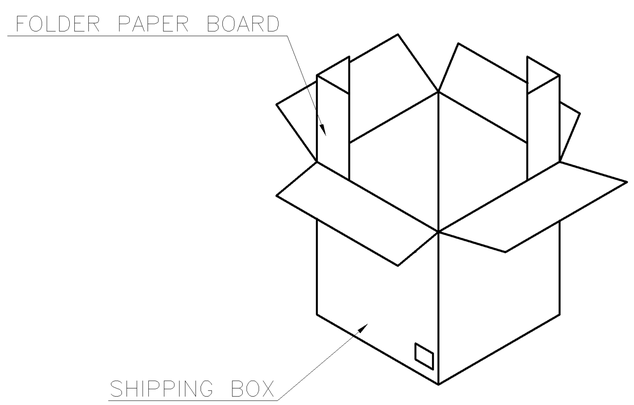

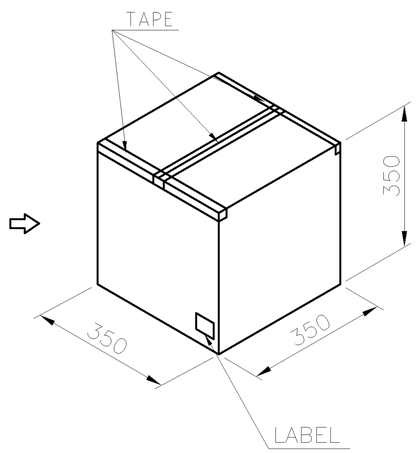

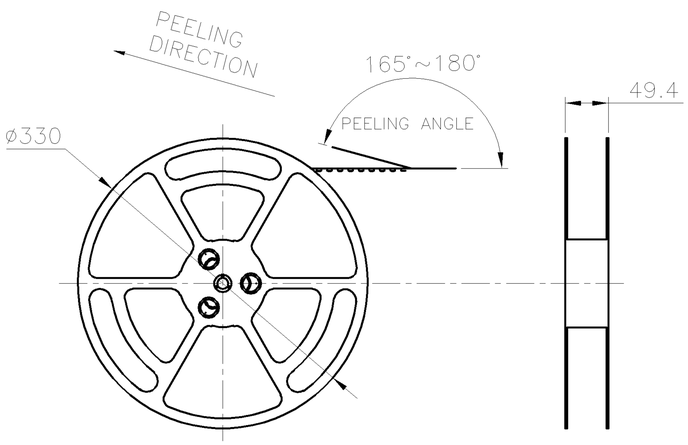

GROSS WEIGHT	NET WEIGHT	PCS/REEL	REELS /CARTON	QUANTITY	PART NUMBER
7.01 Kg	2.98 Kg	100	7	700 PCS	4-1734062-3

THIS DRAWING IS A CONTROLLED DOCUMENT.

DIMENSIONS: MM

TOLERANCES UNLESS OTHERWISE SPECIFIED:
0 PLC ± –
1 PLC ± –
2 PLC ± –
3 PLC ± –
4 PLC ± –
ANGLES ± –

MATERIAL –

FINISH –

DWN
CHK
APVD
PRODUCT SPEC —
APPLICATION SPEC —
WEIGHT —

TE Connectivity

NAME
USB CONNECTOR, A SERIES, STACKED, OFFSET TYPE

SIZE	CAGE CODE	DRAWING NO	RESTRICTED TO
A3	00779	C-1734062	—

CUSTOMER DRAWING | SCALE — | SHEET 21 OF 24 | REV G

THIS DRAWING IS UNPUBLISHED. RELEASED FOR PUBLICATION -,- .
© COPYRIGHT - BY TYCO ELECTRONICS CORPORATION. ALL RIGHTS RESERVED.

LOC	DIST
DW	—

REVISIONS

P	LTR	DESCRIPTION	DATE	DWN	APVD
		SEE SHEET 1.			

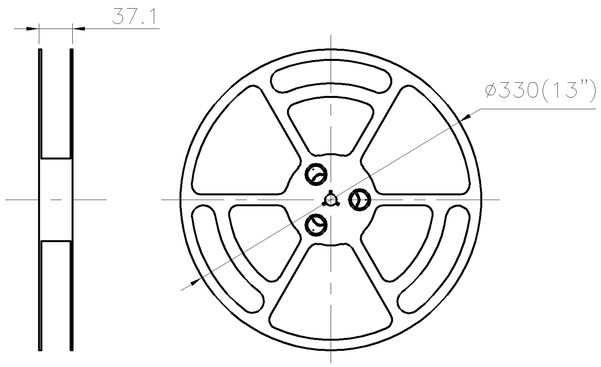

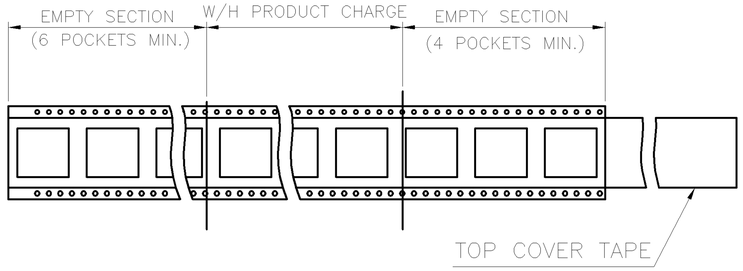

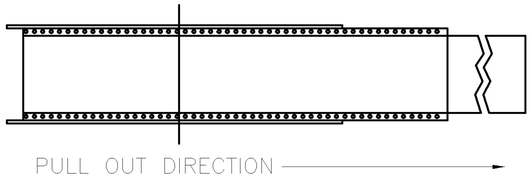

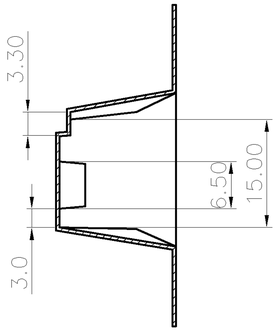

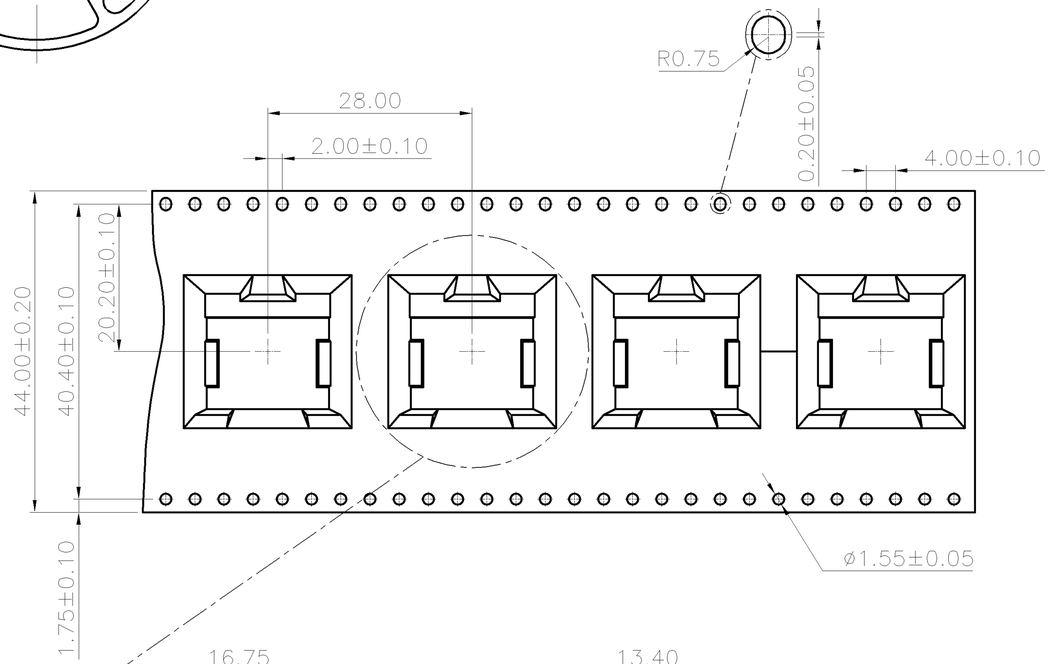

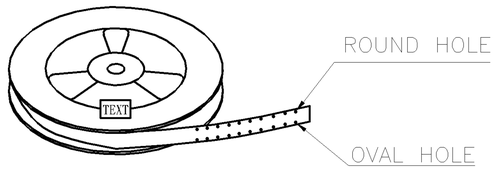

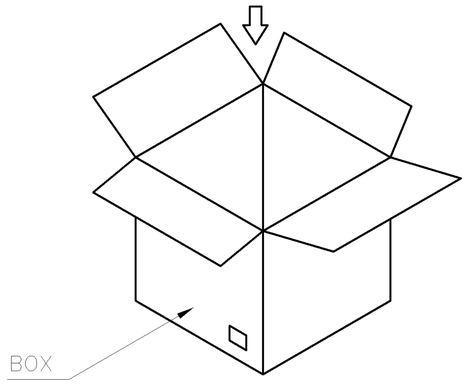

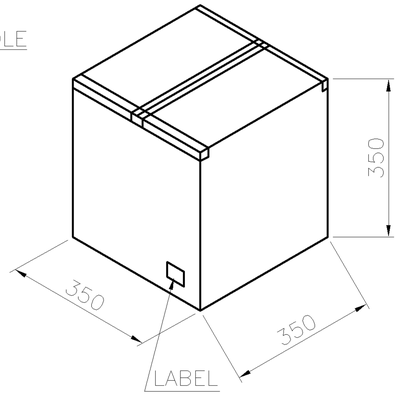

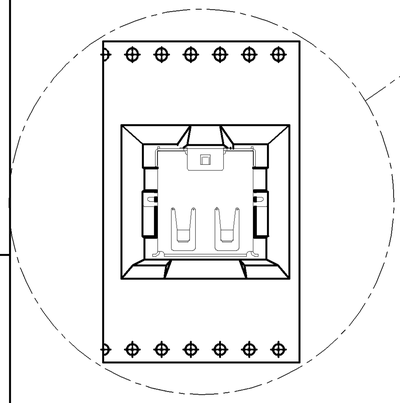

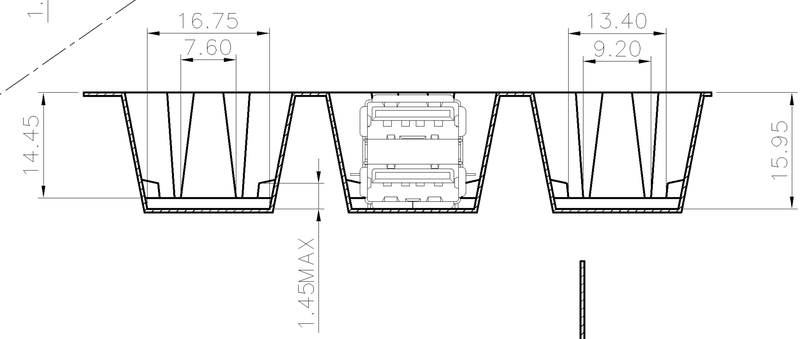

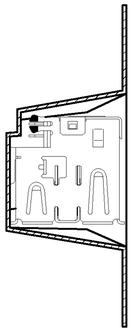

150	7	1050	8.93	4.95	6-1734062-1
PCS/ REEL	REELS/ BOX	QUANTITY (PCS)	G/W (Kg)	N/W (Kg)	PART NUMBER

THIS DRAWING IS A CONTROLLED DOCUMENT.

DIMENSIONS: MM

TOLERANCES UNLESS OTHERWISE SPECIFIED:
0 PLC ± –
1 PLC ± –
2 PLC ± –
3 PLC ± –
4 PLC ± –
ANGLES ± –

MATERIAL –

FINISH –

DWN
CHK
APVD
PRODUCT SPEC —
APPLICATION SPEC —
WEIGHT —

TE Connectivity

NAME
USB CONNECTOR, A SERIES, STACKED, OFFSET TYPE

SIZE	CAGE CODE	DRAWING NO	RESTRICTED TO
A3	00779	C-1734062	—

CUSTOMER DRAWING | SCALE — | SHEET 22 OF 24 | REV G

THIS DRAWING IS UNPUBLISHED. RELEASED FOR PUBLICATION -,- .
© COPYRIGHT - BY TYCO ELECTRONICS CORPORATION. ALL RIGHTS RESERVED.

LOC	DIST
DW	—

REVISIONS

P	LTR	DESCRIPTION	DATE	DWN	APVD
		SEE SHEET 1.			

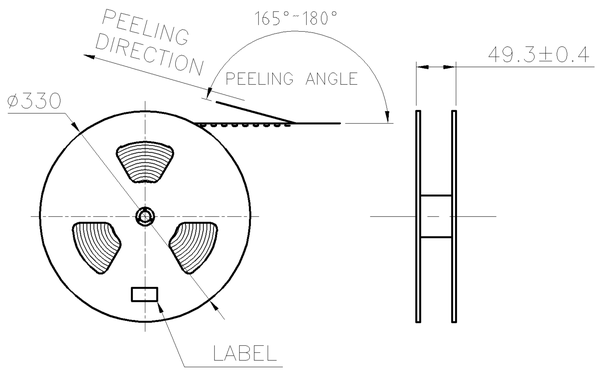

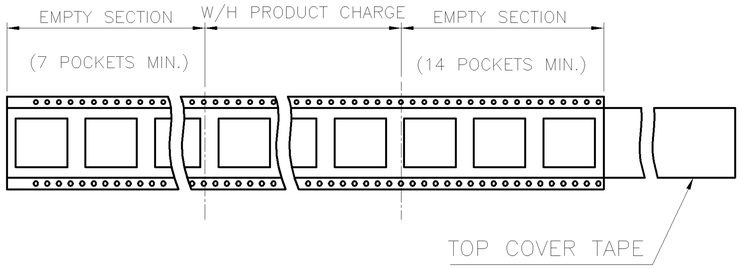

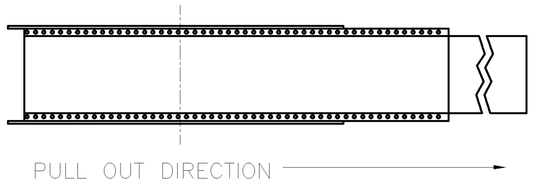

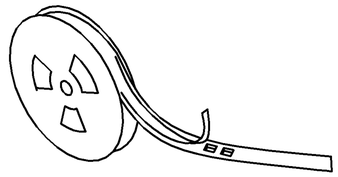

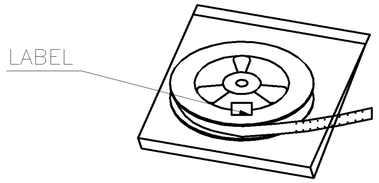

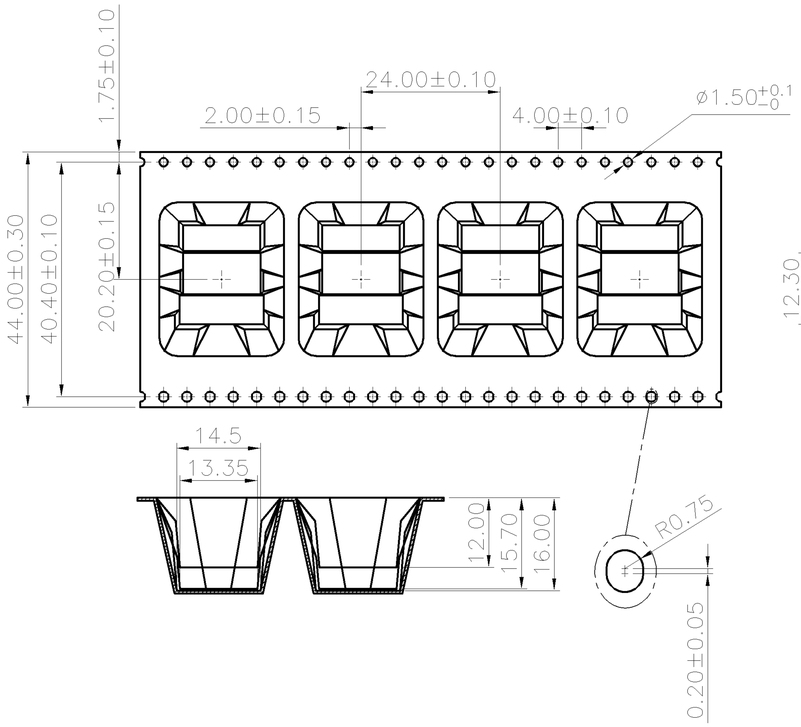

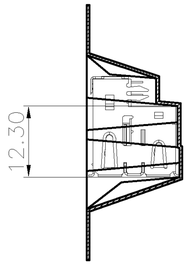

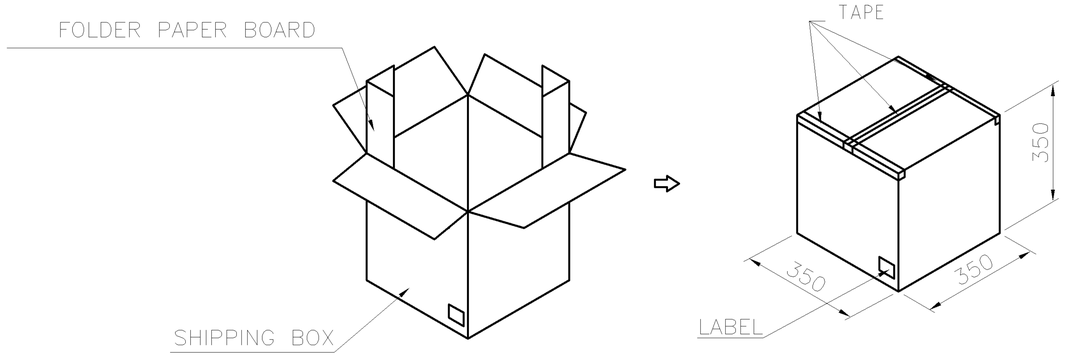

130	7	910	7.94	3.91	7-1734062-1
PCS/ REEL	REELS/ BOX	QUANTITY (PCS)	G/W (Kg)	N/W (Kg)	PART NUMBER

THIS DRAWING IS A CONTROLLED DOCUMENT.

DIMENSIONS: MM

TOLERANCES UNLESS OTHERWISE SPECIFIED:

0 PLC	± -
1 PLC	± -
2 PLC	± -
3 PLC	± -
4 PLC	± -
ANGLES	± -

MATERIAL: -

FINISH: -

DWN
CHK
APVD
PRODUCT SPEC: —
APPLICATION SPEC: —
WEIGHT: —

TE Connectivity

NAME: USB CONNECTOR, A SERIES, STACKED, OFFSET TYPE

SIZE	CAGE CODE	DRAWING NO	RESTRICTED TO
A3	00779	C-1734062	—

CUSTOMER DRAWING | SCALE — | SHEET 23 OF 24 | REV G

THIS DRAWING IS UNPUBLISHED. RELEASED FOR PUBLICATION -,- .
© COPYRIGHT - BY TYCO ELECTRONICS CORPORATION. ALL RIGHTS RESERVED.

LOC	DIST
DW	—

REVISIONS

P	LTR	DESCRIPTION	DATE	DWN	APVD
		SEE SHEET 1.			

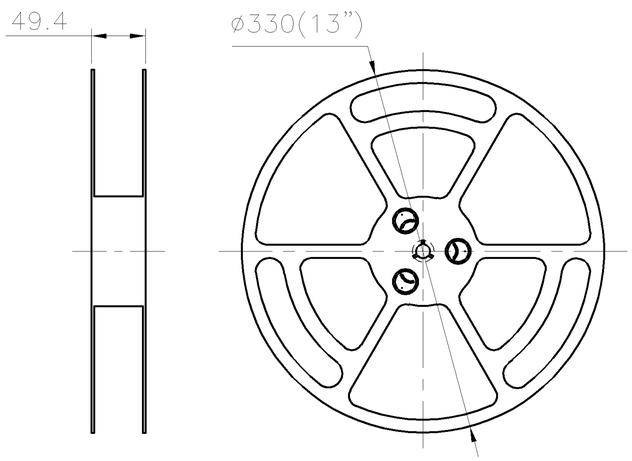

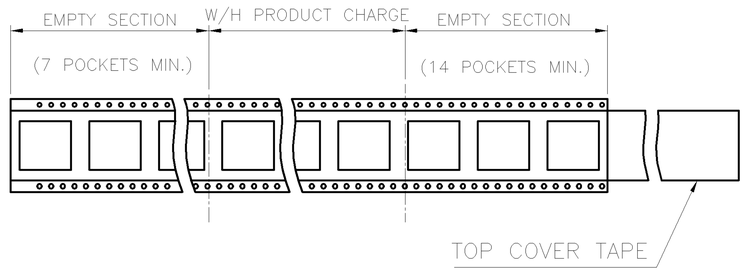

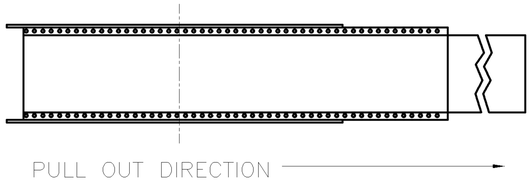

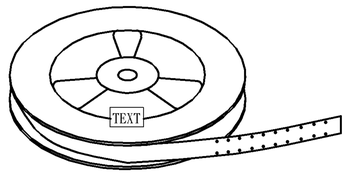

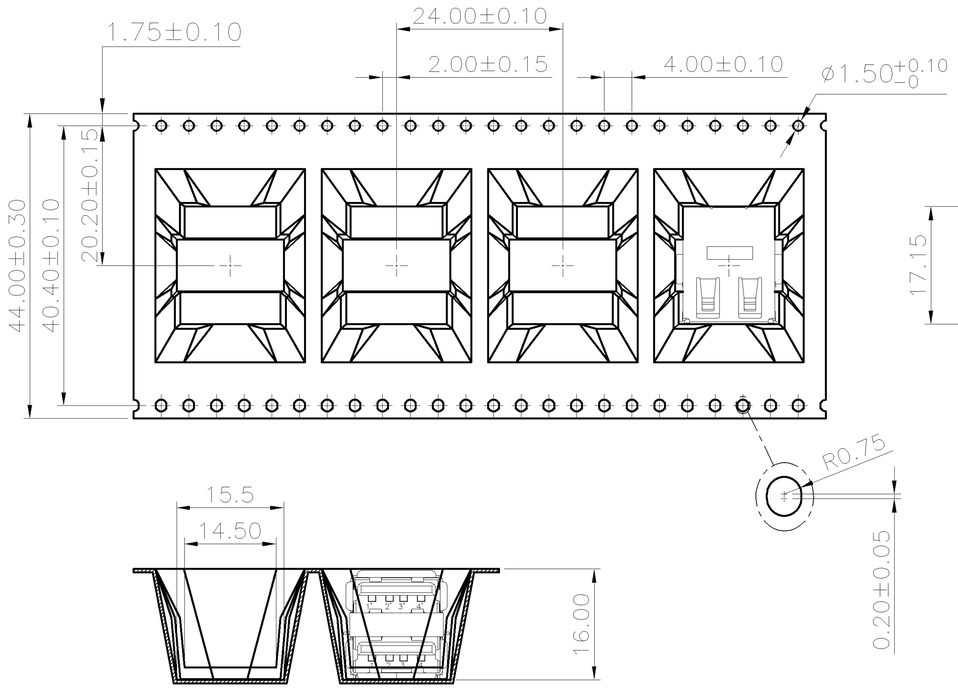

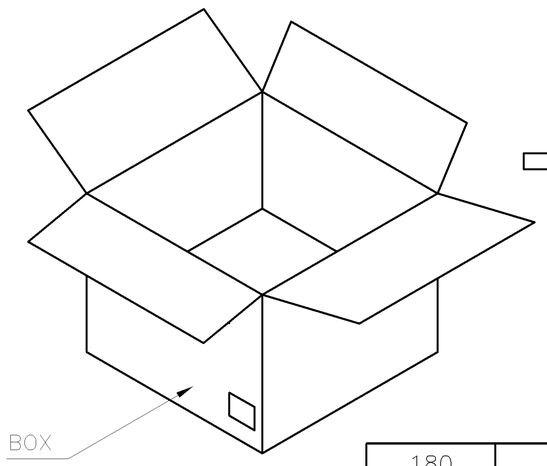

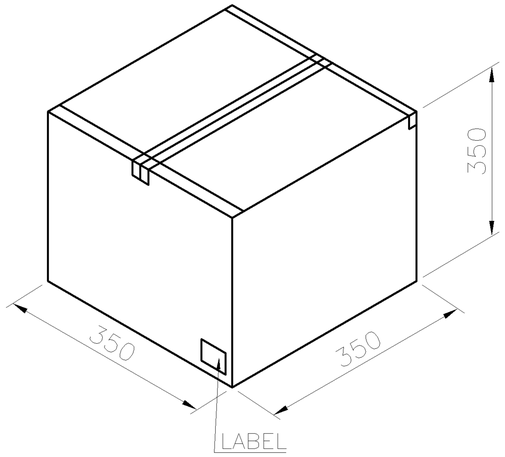

180	7	1260	9.40	5.42	8-1734062-1
PCS/ REEL	REELS/ BOX	QUANTITY (PCS)	G/W (Kg)	N/W (Kg)	PART NUMBER

THIS DRAWING IS A CONTROLLED DOCUMENT.

DIMENSIONS: MM

TOLERANCES UNLESS OTHERWISE SPECIFIED:
0 PLC ± –
1 PLC ± –
2 PLC ± –
3 PLC ± –
4 PLC ± –
ANGLES ± –

MATERIAL –

FINISH –

DWN
CHK
APVD
PRODUCT SPEC —
APPLICATION SPEC —
WEIGHT —

TE Connectivity

NAME
USB CONNECTOR, A SERIES, STACKED, OFFSET TYPE

SIZE	CAGE CODE	DRAWING NO	RESTRICTED TO
A3	00779	C-1734062	—

CUSTOMER DRAWING | SCALE — | SHEET 24 OF 24 | REV G