Chipsmall Limited consists of a professional team with an average of over 10 year of expertise in the distribution of electronic components. Based in Hongkong, we have already established firm and mutual-benefit business relationships with customers from,Europe,America and south Asia,supplying obsolete and hard-to-find components to meet their specific needs.

With the principle of “Quality Parts,Customers Priority,Honest Operation,and Considerate Service”,our business mainly focus on the distribution of electronic components. Line cards we deal with include Microchip,ALPS,ROHM,Xilinx,Pulse,ON,Everlight and Freescale. Main products comprise IC,Modules,Potentiometer,IC Socket,Relay,Connector.Our parts cover such applications as commercial,industrial, and automotives areas.

We are looking forward to setting up business relationship with you and hope to provide you with the best service and solution. Let us make a better world for our industry!

Contact us

Tel: +86-755-8981 8866 Fax: +86-755-8427 6832
Email & Skype: info@chipsmall.com Web: www.chipsmall.com
Address: A1208, Overseas Decoration Building, #122 Zhenhua RD., Futian, Shenzhen, China

THIS DRAWING IS UNPUBLISHED. RELEASED FOR PUBLICATION -,- .
© COPYRIGHT 2010 BY TYCO ELECTRONICS CORPORATION. ALL RIGHTS RESERVED.

LOC DW DIST —

REVISIONS

P	LTR	DESCRIPTION	DATE	DWN	APVD
	D	REVISED (ECR-12-013695) SHELL CHANGE TO TYPE B FOR 1734795-4	16AUG'12	E.L.	W.K.

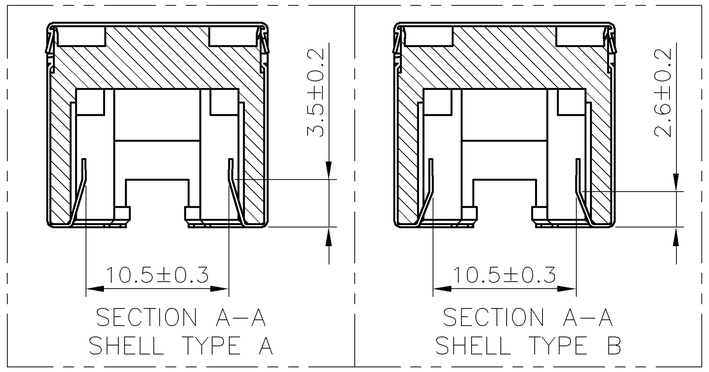

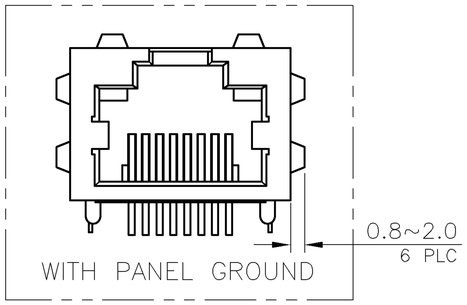

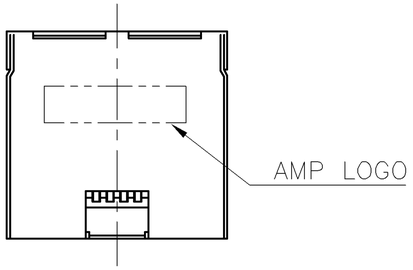

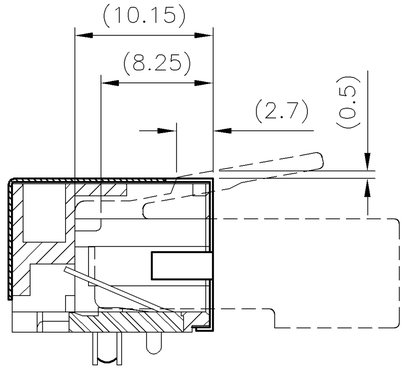

MATING WITH RJ-45 PLUG
(REFERENCE)

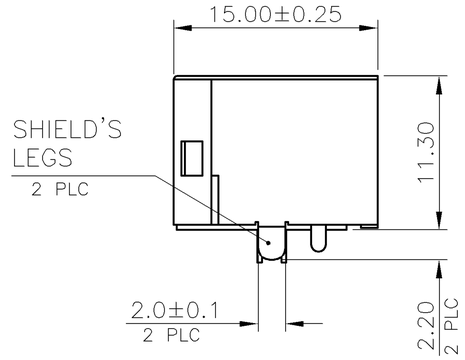

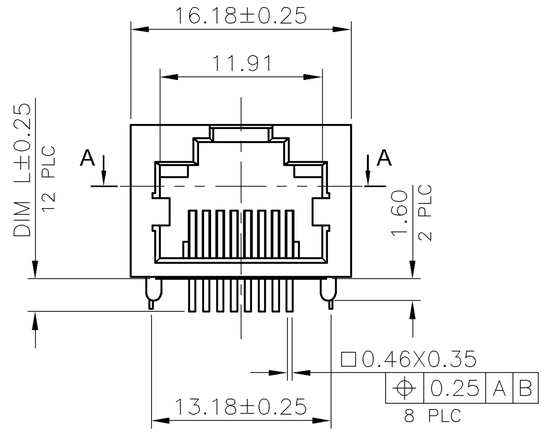

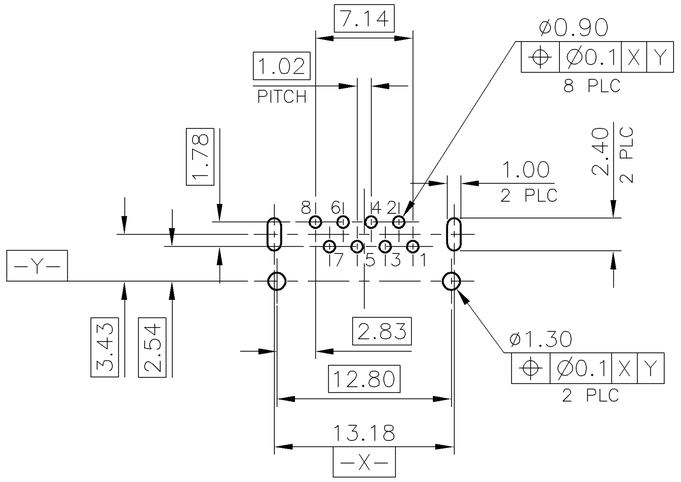

RECOMMENDED PCB LAYOUT (THICKNESS: 1.6MM)
(DIMENSION TOLERANCE: 1 PLC: ±0.1, 2 PLC:±0.05)

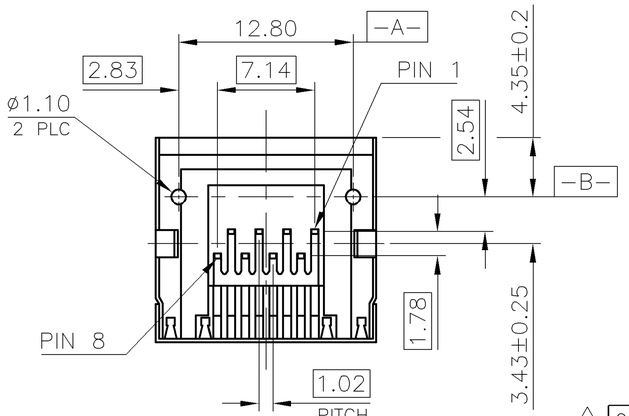

NOTE:
1. MATERIAL:
   1.1 HOUSING: PA9T WITH 30% GF, UL 94V-0, BLACK COLOR.
   1.2 CONTACTS: PHOSPHOR BRONZE.
   1.3 SHELL: BRASS.
2. FINISH:
   2.1 CONTACTS:
      (SEE TABLE) GOLD PLATED ON CONTACT AREA.
      GOLD FLASH ON SOLDER TAIL.
      1.27um [50u"] MIN. NICKEL UNDERPLATED OVERALL.
   2.2 SHELL: 0.51um [20u"] MIN. NICKEL PLATED.
3. WAVE SOLDER CAPABLE TO 265°C PER TYCO TEST SPEC. 109-202, CONDITION B.
4. OBSOLETE PART : OBSOLETE CIS STREAMLINING PER D.RENAUD/D.SINISI

PACKAGE TYPE	PANEL GROUND	LED	SHELL TYPE	DIM L	MIN. GOLD THICKNESS	PART NUMBER
TAPE & REEL	W/O	W/O	TYPE A	2.2	6u"	3-1734795-2
				1.5	6u"	3-1734795-1
TRAY	W/			2.4	50u"	1734795-8
					30u"	1734795-7
					15u"	1734795-6
					6u"	1734795-5
	W/O		TYPE B		50u"	1734795-4
			TYPE A		30u"	1734795-3
					15u"	~~1734795-2~~
					6u"	1734795-1

4 OBSOLETE

THIS DRAWING IS A CONTROLLED DOCUMENT.

DIMENSIONS: mm

TOLERANCES UNLESS OTHERWISE SPECIFIED:

0 PLC	± -
1 PLC	± 0.3
2 PLC	± 0.2
3 PLC	± 0.15
4 PLC	± -
ANGLES	± 3°

MATERIAL: SEE NOTE
FINISH: SEE NOTE

DWN O. HU 14SEP2007
CHK S. HOU 14SEP2007
APVD W.J. KE 14SEP2007
PRODUCT SPEC 108-57535
APPLICATION SPEC —
WEIGHT 3.5 GRAMS
CUSTOMER DRAWING

TE Connectivity

NAME
MODULAR JACK CONNECTOR
RJ45, 8P8C, SHIELDED
TAB UP, DIP TYPE, H=11.3mm

SIZE A3 | CAGE CODE 00779 | DRAWING NO C-1734795 | RESTRICTED TO —
SCALE — | SHEET 1 OF 5 | REV D

1470-19 (1/08)

THIS DRAWING IS UNPUBLISHED. RELEASED FOR PUBLICATION -,- .
© COPYRIGHT 2010 BY TYCO ELECTRONICS CORPORATION. ALL RIGHTS RESERVED.

LOC	DIST
DW	—

REVISIONS

P	LTR	DESCRIPTION	DATE	DWN	APVD
		SEE SHEET 1.			

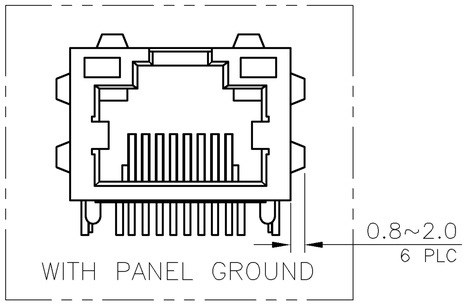

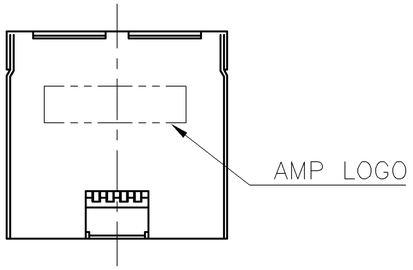

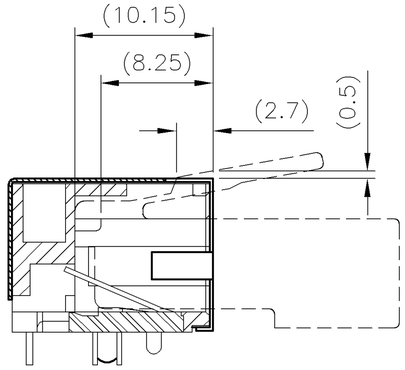

MATING WITH RJ-45 PLUG
(REFERENCE)

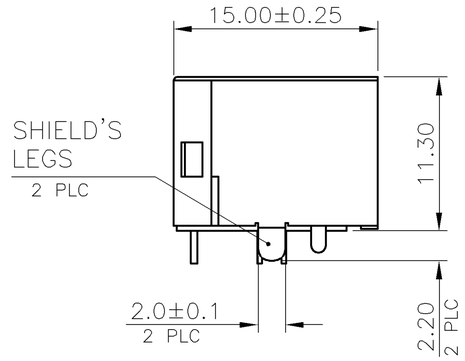

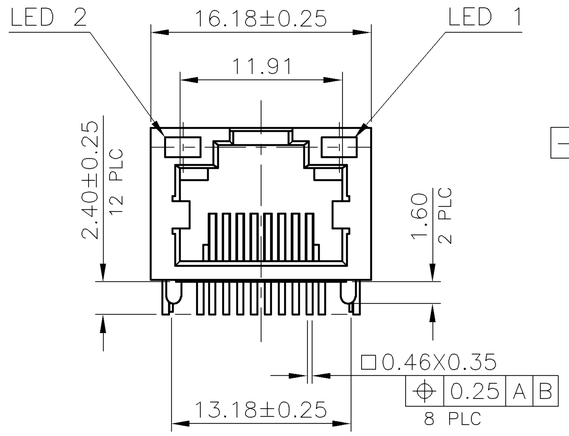

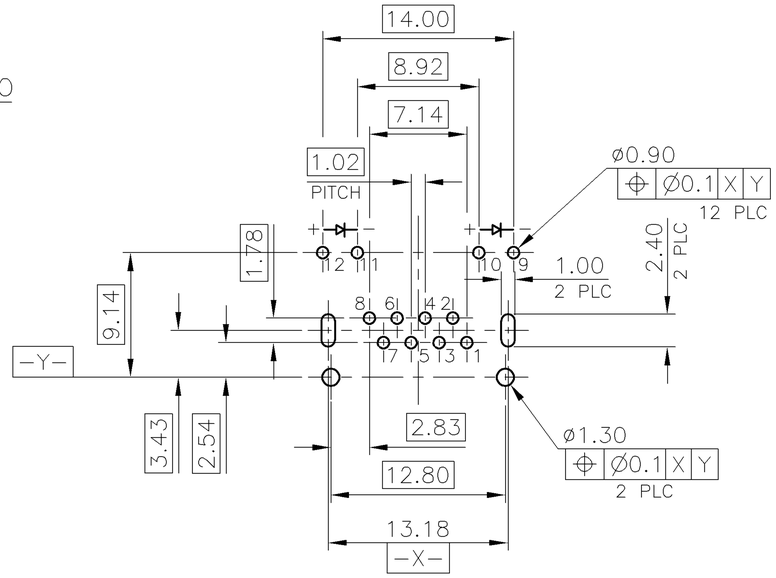

RECOMMENDED PCB LAYOUT (THICKNESS: 1.6MM)
(DIMENSION TOLERANCE: 1 PLC: ±0.1, 2 PLC:±0.05)

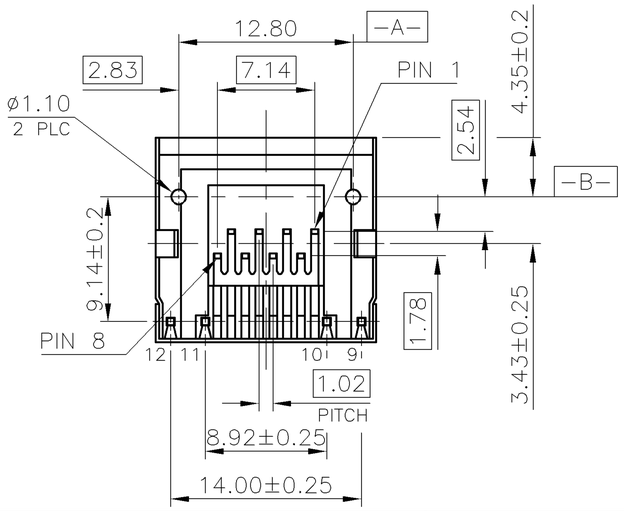

NOTE:
1. MATERIAL:
   1.1 HOUSING: PA9T WITH 30% GF, UL 94V-0, BLACK COLOR.
   1.2 CONTACTS: PHOSPHOR BRONZE.
   1.3 SHELL: BRASS.
   1.4 LED LIGHT: EPOXY RESIN & STEEL
2. FINISH:
   2.1 CONTACTS:
      (SEE TABLE) GOLD PLATED ON CONTACT AREA.
      GOLD FLASH ON SOLDER TAIL.
      1.27um [50u"] MIN. NICKEL UNDERPLATED OVERALL.
   2.2 SHELL: 0.51um [20u"] MIN. NICKEL PLATED.
   2.3 LED: 1.02um [40u"] COPPER UNDERPLATED OVERALL.
      1.27um [50u"] NICKEL OVERALL.
      1.27um [50u"] SILVER ON BONDING AREA.
      2.54um [100u"] BRIGHT-TIN ON SOLDER AREA.
3. WAVE SOLDER CAPABLE TO 265°C PER TYCO TEST SPEC. 109-202, CONDITION B.
4. OBSOLETE PART : OBSOLETE CIS STREAMLINING PER D.RENAUD/D.SINISI

PANEL GROUND	LED 2	LED 1	MIN. GOLD THICKNESS	PART NUMBER
	LED'S COLOR			
W/	GREEN	GREEN	15u"	2-1734795-2
	ORANGE	YELLOW	50u"	1-1734795-8
			30u"	1-1734795-7
			15u"	1-1734795-6
			6u"	1-1734795-5
W/O	YELLOW	GREEN	50u"	1-1734795-4
			30u"	1-1734795-3
			15u"	~~1-1734795-2~~
			6u"	1-1734795-1

4 OBSOLETE

THIS DRAWING IS A CONTROLLED DOCUMENT.

DIMENSIONS: mm

TOLERANCES UNLESS OTHERWISE SPECIFIED:

0 PLC	± -
1 PLC	± 0.3
2 PLC	± 0.2
3 PLC	± 0.15
4 PLC	± -
ANGLES	± 3°

MATERIAL: SEE NOTE
FINISH: SEE NOTE

DWN —
CHK —
APVD —
PRODUCT SPEC —
APPLICATION SPEC —
WEIGHT 3.5 GRAMS

TE Connectivity

NAME
MODULAR JACK CONNECTOR
RJ45, 8P8C, SHIELDED
TAB UP, DIP TYPE, H=11.3mm

SIZE	CAGE CODE	DRAWING NO	RESTRICTED TO
A3	00779	C-1734795	—

CUSTOMER DRAWING | SCALE — | SHEET 2 OF 5 | REV D

THIS DRAWING IS UNPUBLISHED. RELEASED FOR PUBLICATION – , – .
© COPYRIGHT 2010 BY TYCO ELECTRONICS CORPORATION. ALL RIGHTS RESERVED.

LOC	DIST
DW	—

REVISIONS

P	LTR	DESCRIPTION	DATE	DWN	APVD
		SEE SHEET 1.			

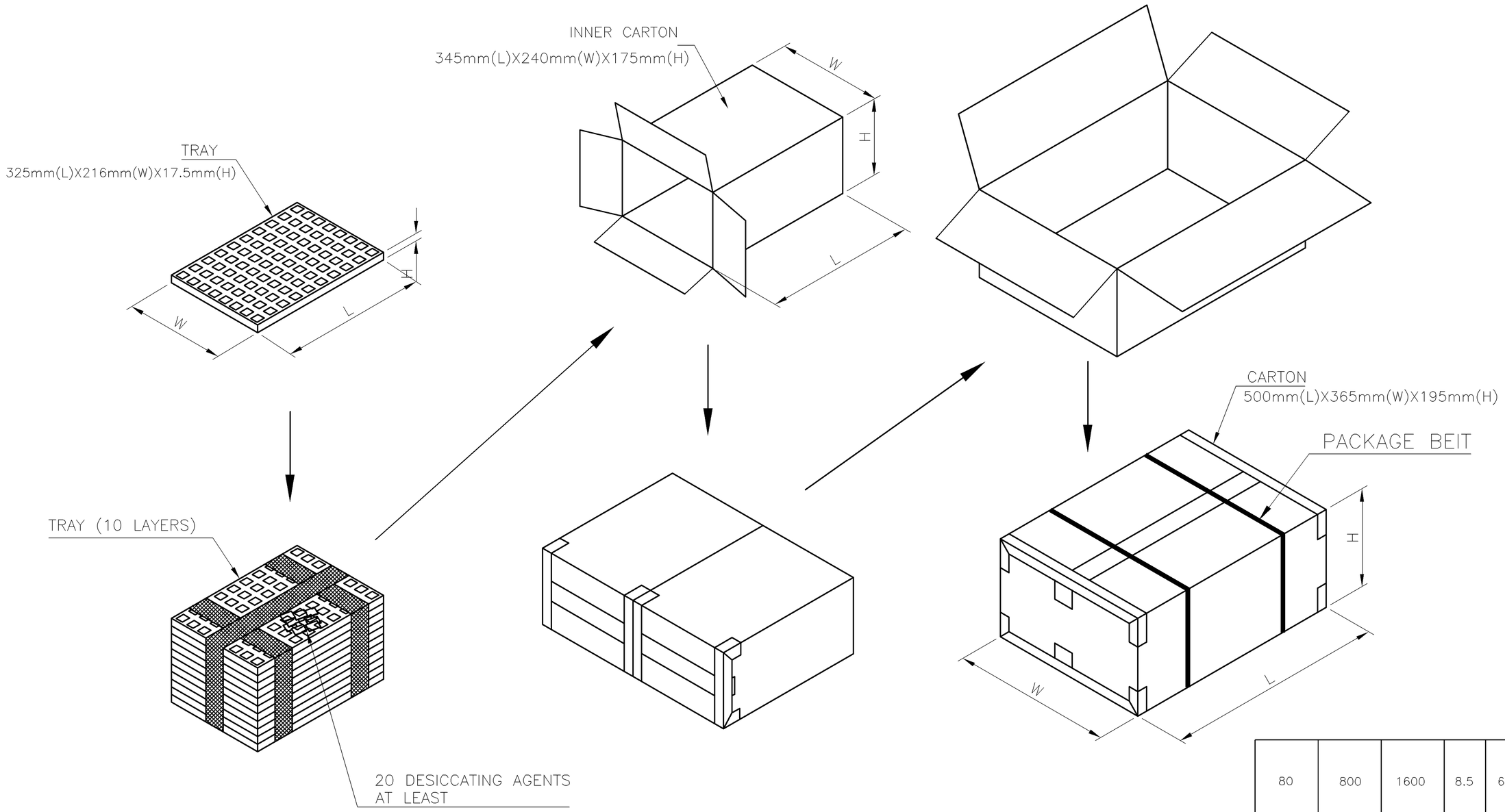

PCS/ TRAY	TRAYS/ CARTON	QUANTITY (PCS)	G/W (Kg)	N/W (Kg)	PART NUMBER
80	800	1600	8.5	6.5	1734795–4
					1734795–3
					△4 ~~1734795–2~~
					1734795–1

THIS DRAWING IS A CONTROLLED DOCUMENT.

DIMENSIONS: mm

TOLERANCES UNLESS OTHERWISE SPECIFIED:

0 PLC	± –
1 PLC	± 0.3
2 PLC	± 0.2
3 PLC	± 0.15
4 PLC	± –
ANGLES	± 3°

MATERIAL –

FINISH –

DWN –
CHK –
APVD –
PRODUCT SPEC –
APPLICATION SPEC –
WEIGHT –

TE Connectivity

NAME

MODULAR JACK CONNECTOR
RJ45, 8P8C, SHIELDED
TAB UP, DIP TYPE, H=11.3mm

SIZE	CAGE CODE	DRAWING NO	RESTRICTED TO
A3	00779	C–1734795	—

CUSTOMER DRAWING | SCALE — | SHEET 3 OF 5 | REV D

1470–19 (1/08)

THIS DRAWING IS UNPUBLISHED. RELEASED FOR PUBLICATION – , – .
© COPYRIGHT 2010 BY TYCO ELECTRONICS CORPORATION. ALL RIGHTS RESERVED.

LOC	DIST
DW	—

REVISIONS

P	LTR	DESCRIPTION	DATE	DWN	APVD
		SEE SHEET 1.			

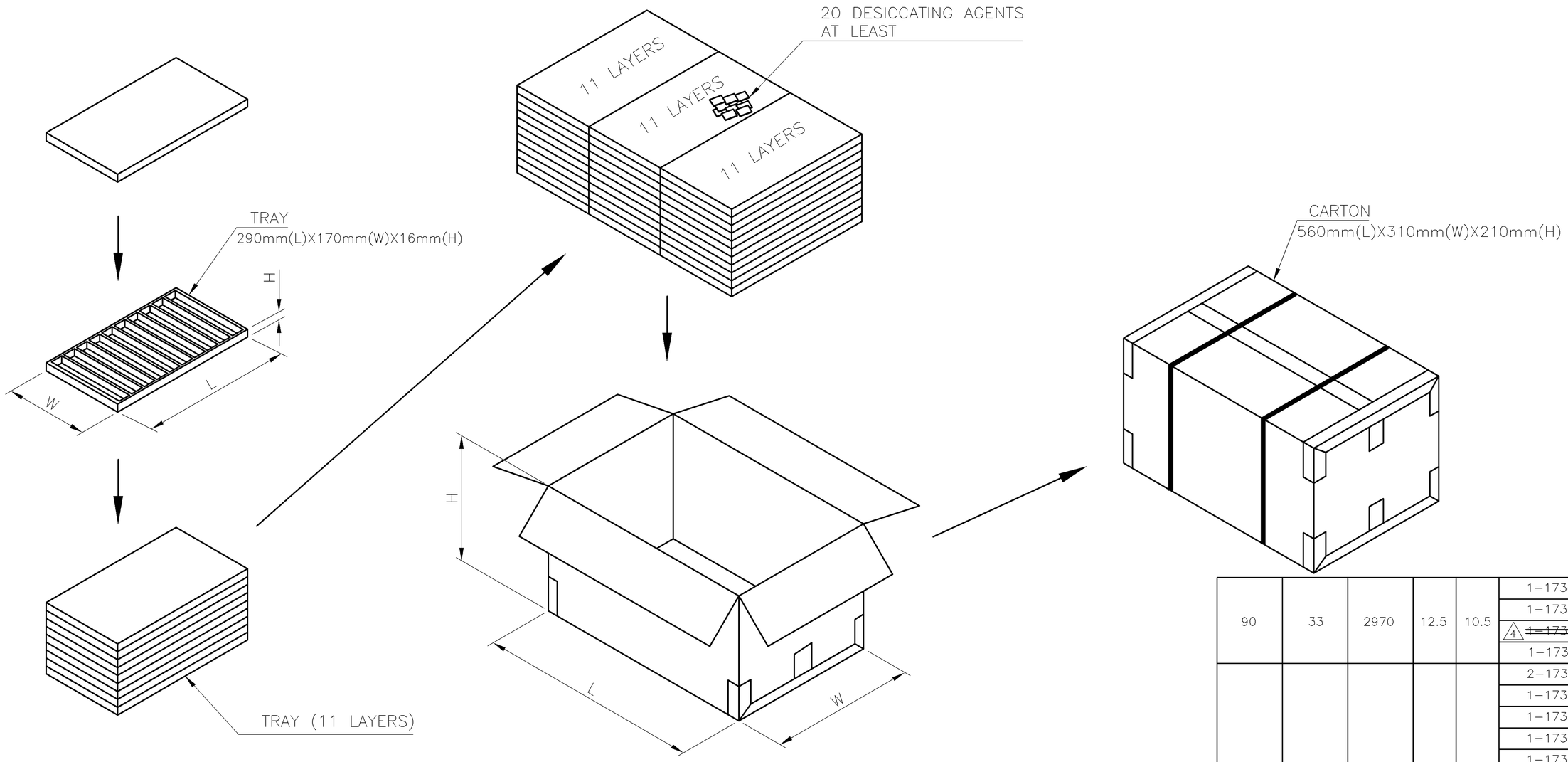

PCS/ TRAY	TRAYS/ CARTON	QUANTITY (PCS)	G/W (Kg)	N/W (Kg)	PART NUMBER
90	33	2970	12.5	10.5	1–1734795–4
					1–1734795–3
					4 ~~1–1734795–2~~
					1–1734795–1
80	33	2640	11	9	2–1734795–2
					1–1734795–8
					1–1734795–7
					1–1734795–6
					1–1734795–5
					1734795–8
					1734795–7
					1734795–6
					1734795–5

THIS DRAWING IS A CONTROLLED DOCUMENT.

DIMENSIONS: mm

TOLERANCES UNLESS OTHERWISE SPECIFIED:

0 PLC	± –
1 PLC	± 0.3
2 PLC	± 0.2
3 PLC	± 0.15
4 PLC	± –
ANGLES	± 3°

MATERIAL –

FINISH –

DWN –
CHK –
APVD –
PRODUCT SPEC –
APPLICATION SPEC –
WEIGHT –

CUSTOMER DRAWING

TE Connectivity

NAME

MODULAR JACK CONNECTOR
RJ45, 8P8C, SHIELDED
TAB UP, DIP TYPE, H=11.3mm

SIZE	CAGE CODE	DRAWING NO	RESTRICTED TO
A3	00779	C–1734795	–

SCALE	SHEET	REV
–	4 OF 5	D

THIS DRAWING IS UNPUBLISHED. RELEASED FOR PUBLICATION -,- .
© COPYRIGHT 2010 BY TYCO ELECTRONICS CORPORATION. ALL RIGHTS RESERVED.

LOC	DIST
DW	—

REVISIONS

P	LTR	DESCRIPTION	DATE	DWN	APVD
		SEE SHEET 1.			

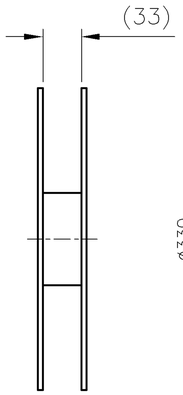

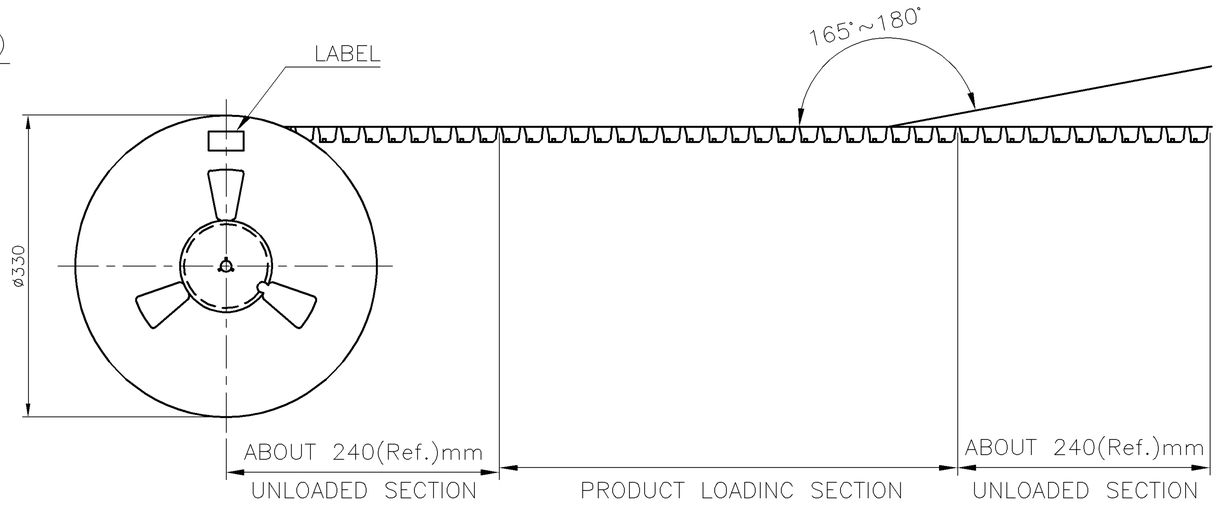

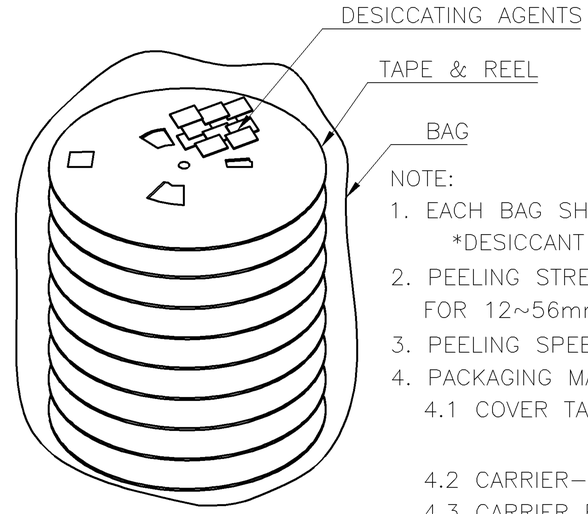

NOTE:
1. EACH BAG SHALL BE INCLUDED:
   *DESICCANT
2. PEELING STRENGTH: 0.1~1.3N(1~130 GRAMS) FOR 12~56mm WIDE CARRIER TAPES
3. PEELING SPEED: 300mm/MINUTES.
4. PACKAGING MATERIAL:
   4.1 COVER TAPE–COMPOSITE OF POLYETHYLENE TEREPHTHALATE (PET)
   4.2 CARRIER–POLYSTYRENE (PS)
   4.3 CARRIER REEL–POLYSTYRENE

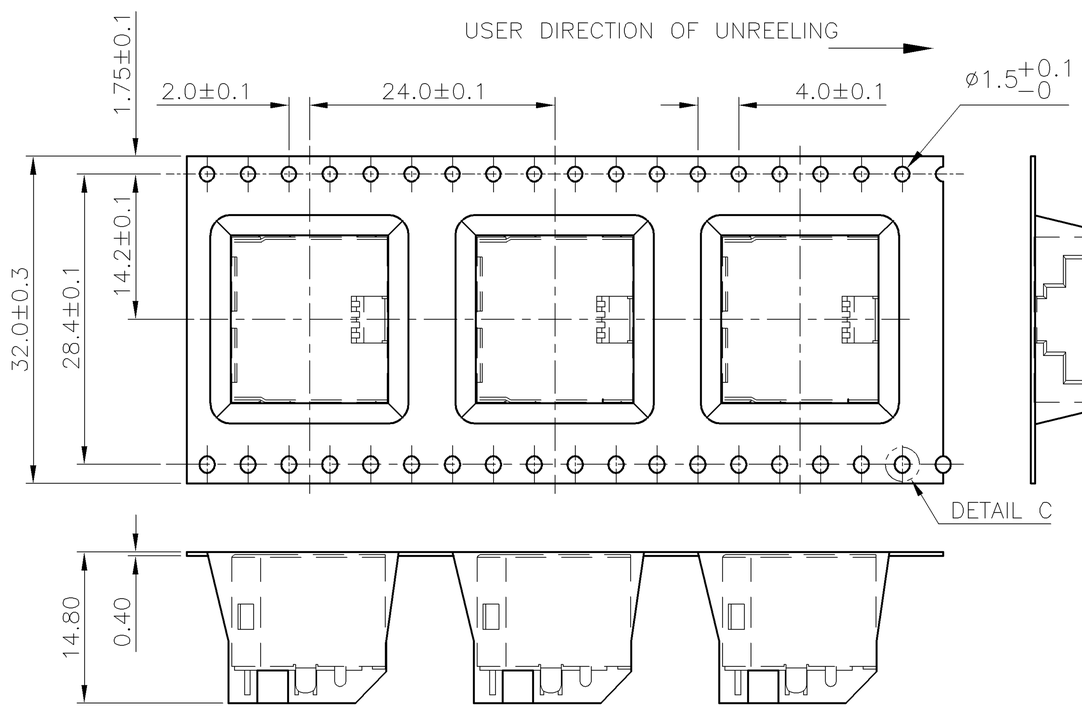

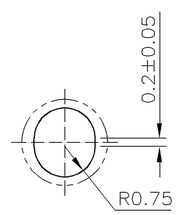

DETAIL C
SCALE 4:1

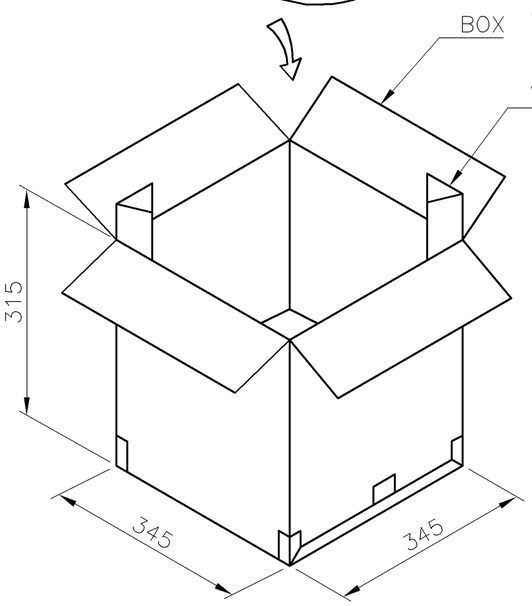

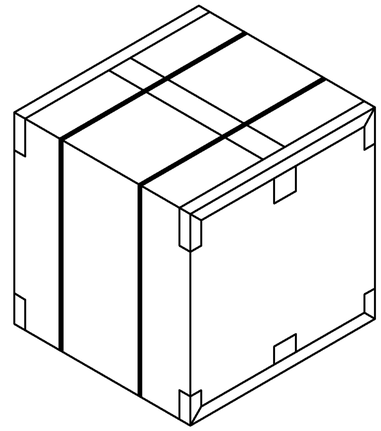

GROSS WEIGHT	NET WEIGHT	PCS/ REEL	REEL/ BOX	PCS/ BOX	PART NUMBER
8.7 KG	5.05 KG	180	8	1440	3–1734795–2 3–1734795–1

THIS DRAWING IS A CONTROLLED DOCUMENT.

DIMENSIONS: mm

TOLERANCES UNLESS OTHERWISE SPECIFIED:

0 PLC	± –
1 PLC	± 0.3
2 PLC	± 0.2
3 PLC	± 0.15
4 PLC	± –
ANGLES	± 3°

MATERIAL –

FINISH –

DWN –
CHK –
APVD –
PRODUCT SPEC –
APPLICATION SPEC –
WEIGHT –

TE Connectivity

NAME
MODULAR JACK CONNECTOR
RJ45, 8P8C, SHIELDED
TAB UP, DIP TYPE, H=11.3mm

SIZE	CAGE CODE	DRAWING NO	RESTRICTED TO
A3	00779	C–1734795	—

CUSTOMER DRAWING | SCALE — | SHEET 5 OF 5 | REV D