Chipsmall Limited consists of a professional team with an average of over 10 year of expertise in the distribution of electronic components. Based in Hongkong, we have already established firm and mutual-benefit business relationships with customers from,Europe,America and south Asia,supplying obsolete and hard-to-find components to meet their specific needs.

With the principle of “Quality Parts,Customers Priority,Honest Operation,and Considerate Service”,our business mainly focus on the distribution of electronic components. Line cards we deal with include Microchip,ALPS,ROHM,Xilinx,Pulse,ON,Everlight and Freescale. Main products comprise IC,Modules,Potentiometer,IC Socket,Relay,Connector.Our parts cover such applications as commercial,industrial, and automotives areas.

We are looking forward to setting up business relationship with you and hope to provide you with the best service and solution. Let us make a better world for our industry!

Contact us

Tel: +86-755-8981 8866 Fax: +86-755-8427 6832
Email & Skype: info@chipsmall.com Web: www.chipsmall.com
Address: A1208, Overseas Decoration Building, #122 Zhenhua RD., Futian, Shenzhen, China

THIS DRAWING IS UNPUBLISHED. RELEASED FOR PUBLICATION -,- .
© COPYRIGHT - By - ALL RIGHTS RESERVED.

LOC	DIST
J	—

REVISIONS 変更

P	LTR	DESCRIPTION	DATE	DWN	APVD
	C4	REVISED ECR-13-017347	07NOV2013	TS	KB

-1: AS SHOWN
本図

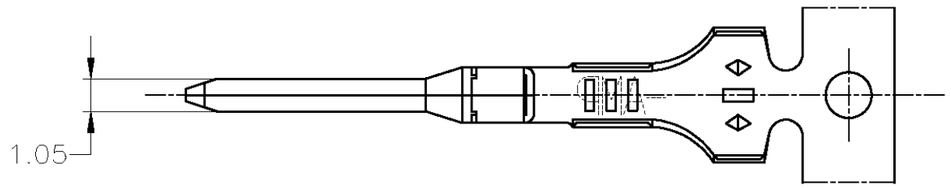

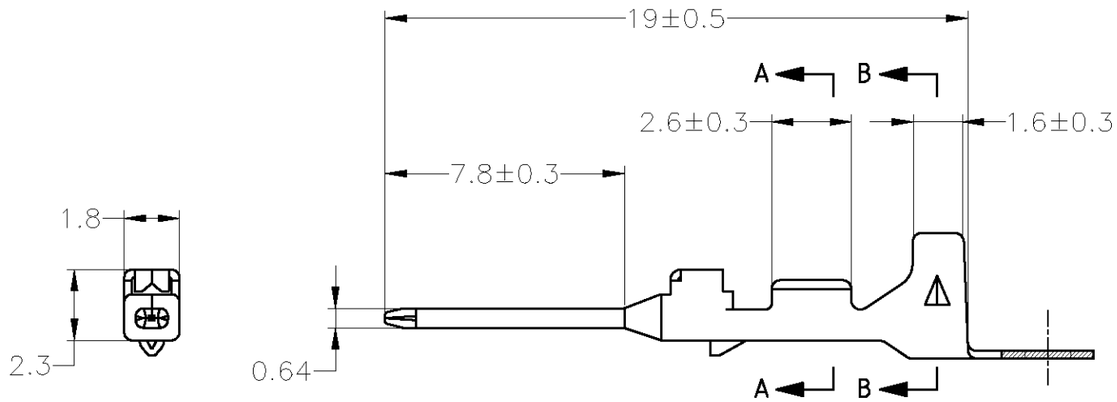

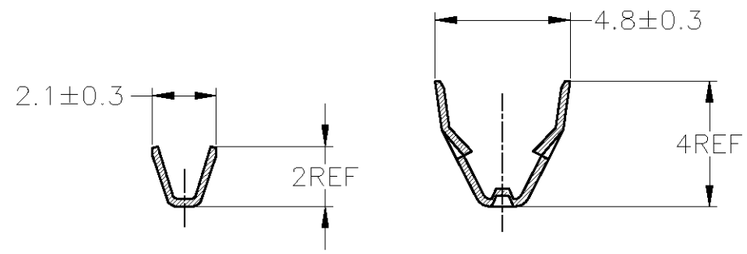

A-A B-B

1. 相手側端子型番：173681
2. バラ状端子型番：175063

1. MATING RECEPTACLE NUMBER; 173681
2. LOOSE PIECE NUMBER: 175063

THIS DRAWING IS A CONTROLLED DOCUMENT.

TOLERANCE UNLESS OTHERWISE SPECIFIED: 一般公差

0 < x ≤ 10	:	±0.2
10 < x ≤ 30	:	±0.25
30 < x ≤ 100	:	±0.3
ANGLE 角度	:	±3°

DIMENSIONS: 単位：耗 mm

TOLERANCES UNLESS OTHERWISE SPECIFIED: 一般公差

0 PLC	± -
1 PLC	± -
2 PLC	± -
3 PLC	± -
4 PLC	± -
ANGLES	± -

MATERIAL 材料: BRASS THICKNESS 黄銅、板厚；0.25

FINISH 仕上: PRE-TINNED 錫めっき済

DWN	M.SUGAWARA	10JAN07
CHK	K.BETSUI	10JAN07
APVD	K.BETSUI	10JAN07
PRODUCT SPEC 製品規格	—	
APPLICATION SPEC 取付適用規格	114-5108	
WEIGHT	0.21g	

TE Connectivity

NAME 名称: 040 SERIES TAB CONTACT

SIZE	CAGE CODE	DRAWING NO 番号	RESTRICTED TO
A3	00779	C-173682	—

CUSTOMER DRAWING

SCALE 尺度	SHEET	REV
5:1	1 OF 1	C4