Chipsmall Limited consists of a professional team with an average of over 10 year of expertise in the distribution of electronic components. Based in Hongkong, we have already established firm and mutual-benefit business relationships with customers from,Europe,America and south Asia,supplying obsolete and hard-to-find components to meet their specific needs.

With the principle of “Quality Parts,Customers Priority,Honest Operation,and Considerate Service”,our business mainly focus on the distribution of electronic components. Line cards we deal with include Microchip,ALPS,ROHM,Xilinx,Pulse,ON,Everlight and Freescale. Main products comprise IC,Modules,Potentiometer,IC Socket,Relay,Connector.Our parts cover such applications as commercial,industrial, and automotives areas.

We are looking forward to setting up business relationship with you and hope to provide you with the best service and solution. Let us make a better world for our industry!

Contact us

Tel: +86-755-8981 8866 Fax: +86-755-8427 6832
Email & Skype: info@chipsmall.com Web: www.chipsmall.com
Address: A1208, Overseas Decoration Building, #122 Zhenhua RD., Futian, Shenzhen, China

THIS DRAWING IS UNPUBLISHED. RELEASED FOR PUBLICATION -,- .
© COPYRIGHT - By - ALL RIGHTS RESERVED.

LOC	DIST
—	—

REVISIONS 変更

P	LTR	DESCRIPTION	DATE	DWN	APVD
	P	REVISED PER ECO-11-005140	28MAR11	RK	HMR

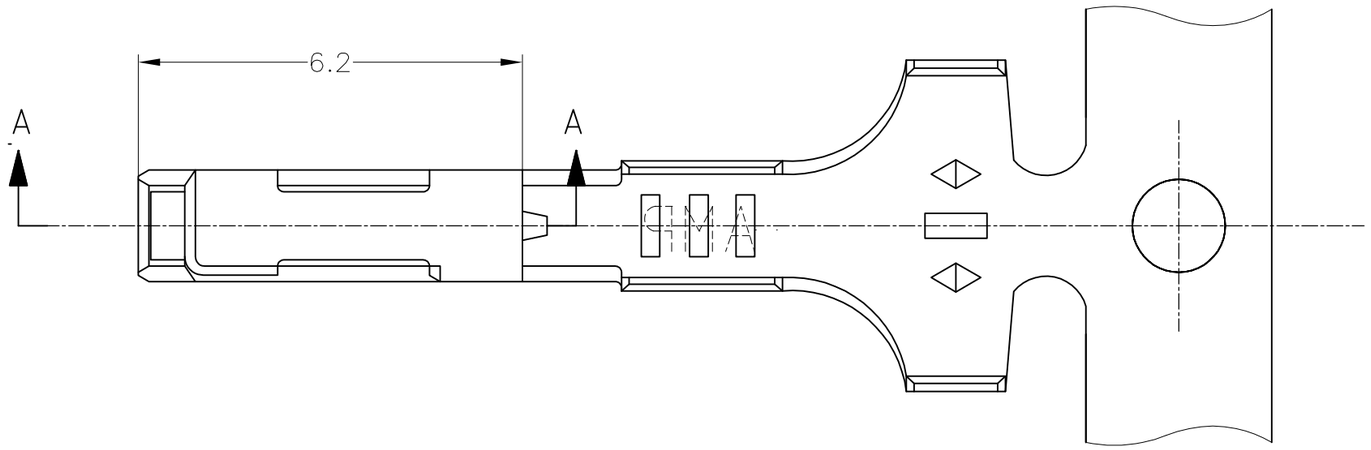

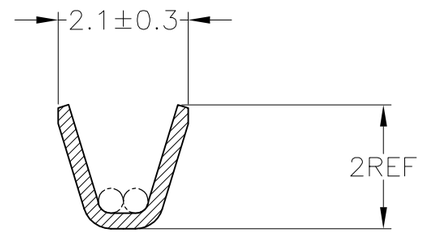

B-B

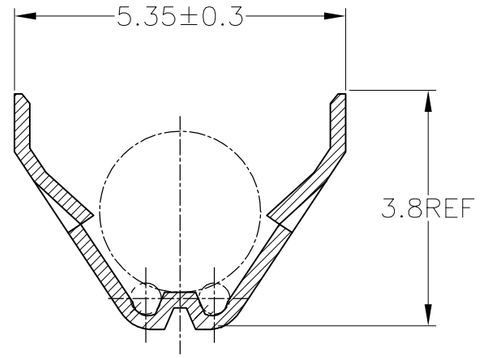

C-C

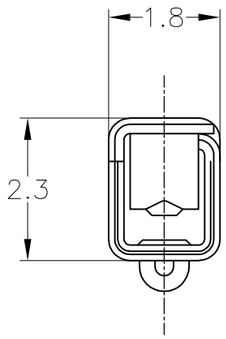

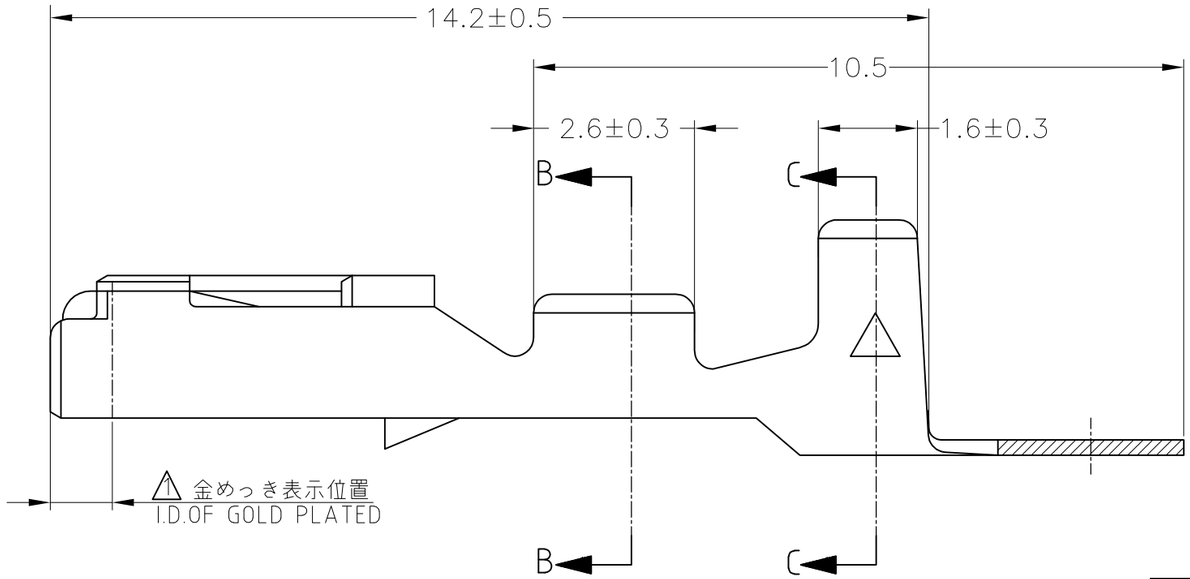

1 SELECTIVE GOLD
2. APPLICATION SPEC NO. 114-5111

1 部分金めっき
2. 取付適用規格番号 114-5111

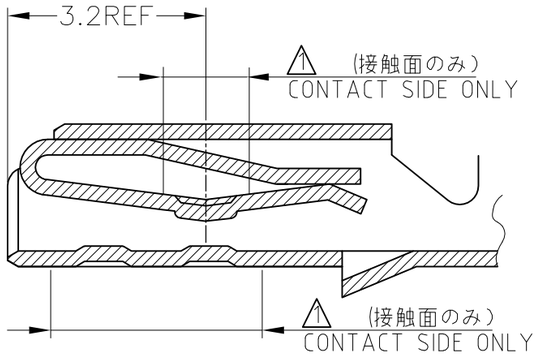

A-A

175061-2	SELECTIVE GOLD 部分金めっき	173716-2
175061-1	PRE-TINNED 錫めっき済	173716-1
LOOSE PIECE NO. バラ状端子型番	FINISH 仕上げ	PART NUMBER 製品型番

WIRE RANGE (抱合電線断面積)	INSULATION DIA. (被覆外径)
0.3～0.5mm² (AWG#22～20)	1.8～2 mmφ

THIS DRAWING IS A CONTROLLED DOCUMENT.

DIMENSIONS: 単位: 粍 mm

TOLERANCES UNLESS OTHERWISE SPECIFIED: 一般公差

0 PLC	± –
1 PLC	± –
2 PLC	± –
3 PLC	± –
4 PLC	± –
ANGLES	± –

TOLERANCES UNLESS OTHERWISE SPECIFIED: 一般公差

10≧	:	±0.2
30≧	>10 :	±0.25
100≧	>30 :	±0.3
ANGLE	:	±3°

MATERIAL 材料: THICKNESS KLF-5 板厚0.25

FINISH 仕上: SEE TABLE 表参照

DWN	M.SUGAWARA	29NOV06
CHK	K.BETSUI	29NOV06
APVD	K.BETSUI	29NOV06
PRODUCT SPEC 製品規格	—	
APPLICATION SPEC 取付適用規格	—	
WEIGHT	—	

TE Connectivity

NAME 名称: 040 SERIES RECEPTACLE CONTACT

SIZE	CAGE CODE	DRAWING NO 番号	RESTRICTED TO
A3	00779	C-173716	—

CUSTOMER DRAWING | SCALE 尺度 10:1 | SHEET 1 OF 1 | REV P