Chipsmall Limited consists of a professional team with an average of over 10 year of expertise in the distribution of electronic components. Based in Hongkong, we have already established firm and mutual-benefit business relationships with customers from,Europe,America and south Asia,supplying obsolete and hard-to-find components to meet their specific needs.

With the principle of “Quality Parts,Customers Priority,Honest Operation,and Considerate Service”,our business mainly focus on the distribution of electronic components. Line cards we deal with include Microchip,ALPS,ROHM,Xilinx,Pulse,ON,Everlight and Freescale. Main products comprise IC,Modules,Potentiometer,IC Socket,Relay,Connector.Our parts cover such applications as commercial,industrial, and automotives areas.

We are looking forward to setting up business relationship with you and hope to provide you with the best service and solution. Let us make a better world for our industry!

Contact us

Tel: +86-755-8981 8866 Fax: +86-755-8427 6832
Email & Skype: info@chipsmall.com Web: www.chipsmall.com
Address: A1208, Overseas Decoration Building, #122 Zhenhua RD., Futian, Shenzhen, China

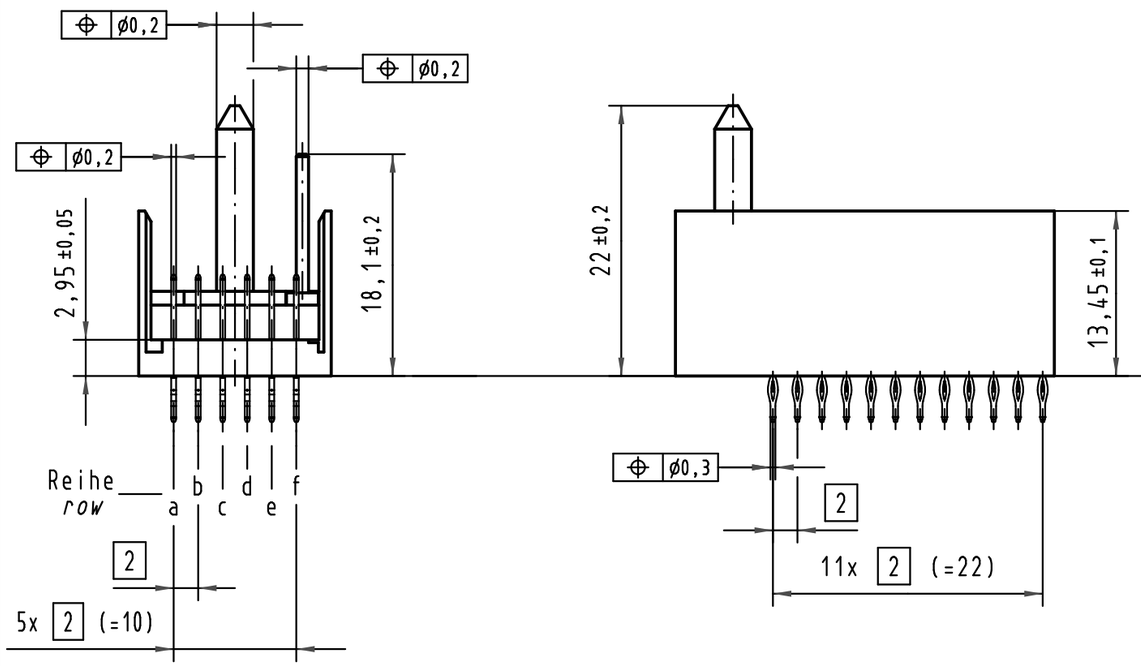

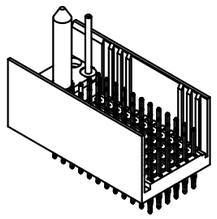

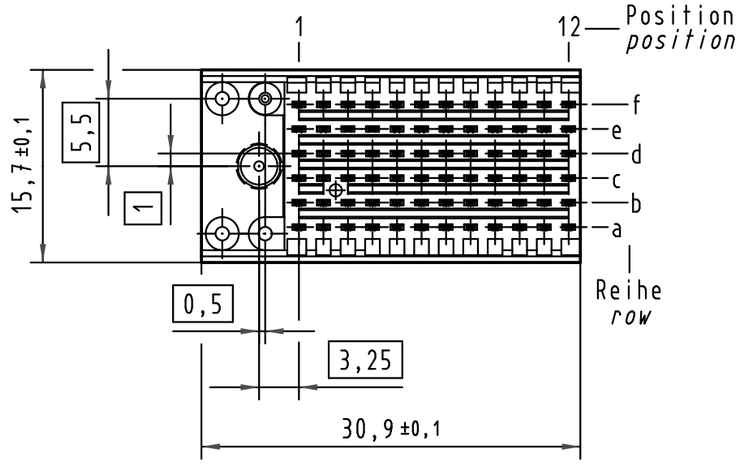

Kontakt-Maße
contact dimensions

(Längen der Steck- und Anschlußseite gelten für eingepreßte Steckverbinder)
(mating and termination length of contacts apply to pressed in connectors)

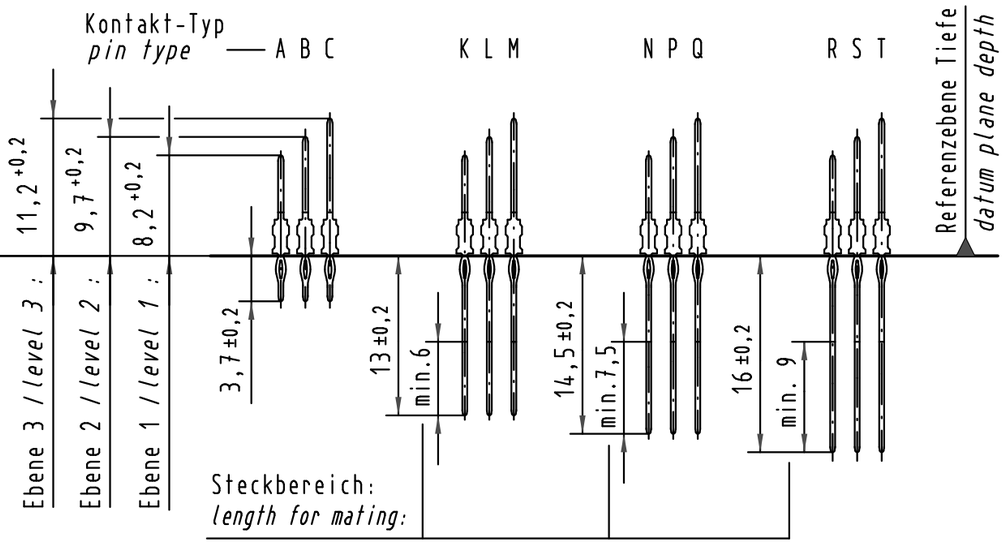

Kontaktbelegung
contact loading

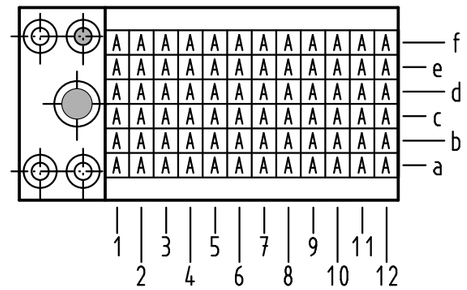

Lochbild
board drillings

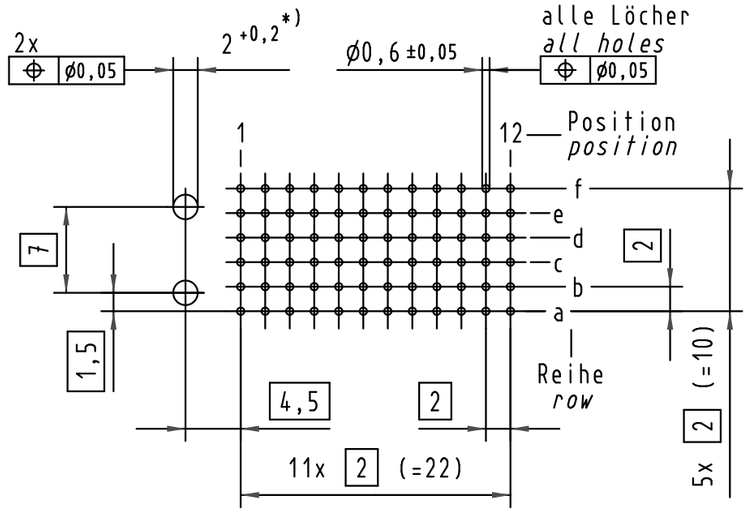

*) Löcher nicht metallisiert
non-metallized drillings

Bohrlochdurchmesser: ø0,7 ±0,02
Lochdurchmesser (mit Oberfläche): ø0,6 ±0,05

drill hole dia.: ø0,7 ±0,02
finished hole dia. (after plating): ø0,6 ±0,05

Bestell-Nr. *part-no.*	Anforderungsstufe nach IEC *performance level acc. to IEC*	Kontaktoberfläche *contact plating*
17 43 072 4211	-	min. 0,127µm Au over min. 0,635µm (25µin) PdNi over min. 1,27µm (50µin) Ni
17 43 072 2211	2	Au flash over PdNi over Ni
17 43 072 1211	1	Au flash over PdNi over Ni

All Dimensions in mm
Original Size DIN A 3

Techn. Character.

Nicht tolerierte Maße/ *Free size tolerances*

	Dat.	Name	Maßstab/*Scale*
Detail.	23.03.04	Buß.	2 : 1
Insp.	23.03.04	Ko	
Stand.			

Mod.	Dat.	Name
34337	11.05.07	Hage.
31807		

HARTING Electronics GmbH & Co. KG
D-32339 ESPELKAMP

har-bus HM Messerleiste mit Flansch
6-reihig, 72 pol., Anschlußlänge 3,7mm, Kodierung 1
har-bus HM male connector with guide
6-row, 72 pol., termination length 3,7mm, coding 1

TB 17 43 072 x211

Blatt/ *page*

Sub.

Alle Rechte vorbehalten/ *All rights reserved*