Chipsmall Limited consists of a professional team with an average of over 10 year of expertise in the distribution of electronic components. Based in Hongkong, we have already established firm and mutual-benefit business relationships with customers from,Europe,America and south Asia,supplying obsolete and hard-to-find components to meet their specific needs.

With the principle of “Quality Parts,Customers Priority,Honest Operation,and Considerate Service”,our business mainly focus on the distribution of electronic components. Line cards we deal with include Microchip,ALPS,ROHM,Xilinx,Pulse,ON,Everlight and Freescale. Main products comprise IC,Modules,Potentiometer,IC Socket,Relay,Connector.Our parts cover such applications as commercial,industrial, and automotives areas.

We are looking forward to setting up business relationship with you and hope to provide you with the best service and solution. Let us make a better world for our industry!

Contact us

Tel: +86-755-8981 8866 Fax: +86-755-8427 6832
Email & Skype: info@chipsmall.com Web: www.chipsmall.com
Address: A1208, Overseas Decoration Building, #122 Zhenhua RD., Futian, Shenzhen, China

THIS DRAWING IS UNPUBLISHED. RELEASED FOR PUBLICATION - ,- .
© COPYRIGHT - By - ALL RIGHTS RESERVED.

LOC	DIST
AA	00

REVISIONS

P	LTR	DESCRIPTION	DATE	DWN	APVD
	D2	REV PER ECR-11-009904	11MAY2011	JJ	MQ.W

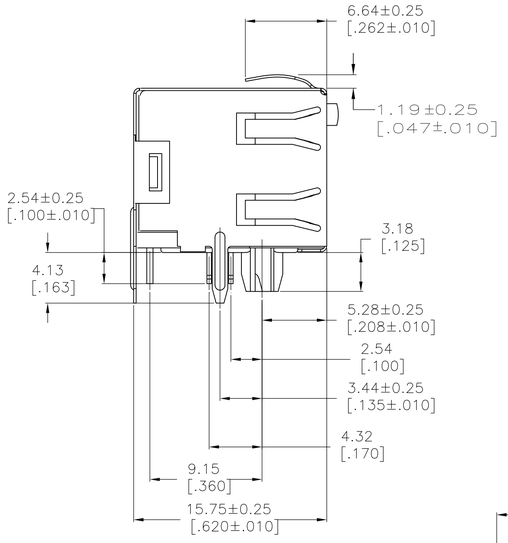

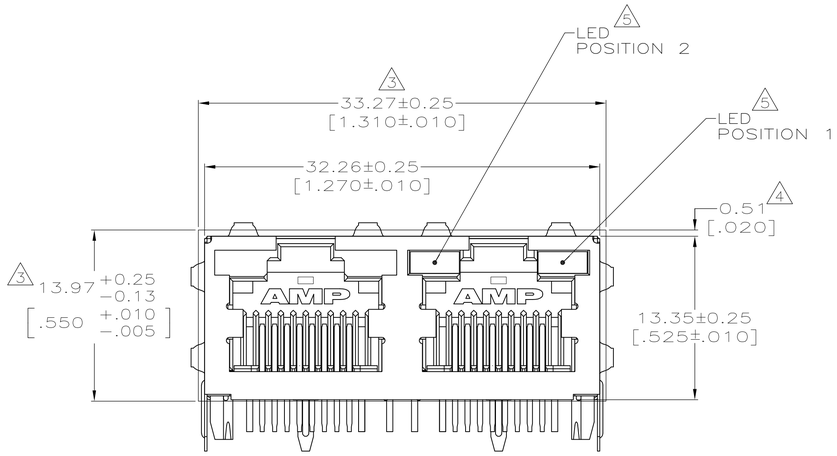

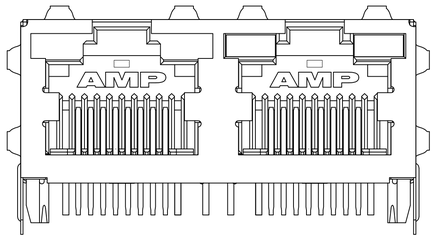

VIEW ONLY FOR 1761791-5 9

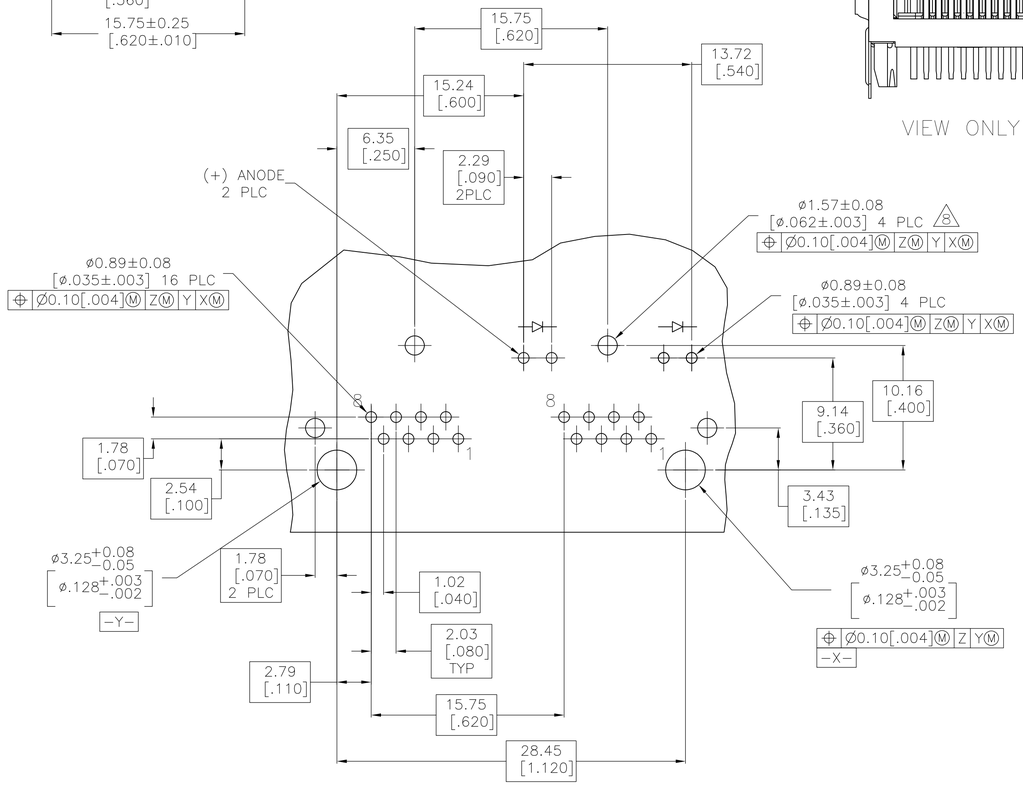

RECOMMENDED PRINTED CIRCUIT BOARD LAYOUT
COMPONENT SIDE

1. MATERIAL:
HOUSING – HIGH TEMPERATURE THERMOPLASTIC, COLOR: BLACK, UL94V-0
TERMINALS – 0.36[.014] THICK PHOS BRONZE PLATED WITH 3.81µm[.000150] MIN THICK BRIGHT TIN LEAD IN SOLDER AREA, 1.27µm[.000050] MIN GOLD IN LOCALIZED PLATE AREA. ENTIRE TERMINAL PLATED WITH 1.27µm[.000050] MIN THICK NICKEL.
SHIELD – 0.196[.0077] THICK COPPER ZINC ALLOY PREPLATED WITH 1.27µm[.000050] MIN SATIN NICKEL WITH 2.03µm[.000080] MIN TIN POST DIPPED ON PCB GROUND TABS
LIGHT EMITTING DIODE (LED) – DIFFUSED EPOXY LENS, 0.51 X 0.51[.020 X .020] CARBON STEEL WIREFRAME LEADS PLATED WITH 8.89µm[.000350] TIN/COPPER OVER 2.03µm[.000080] SILVER OVER 1.02µm[.000040] NICKEL UNDERPLATE OVER 2.03µm[.000080] COPPER UNDERPLATE

2. JACK CAVITY CONFORMS TO FCC RULES AND REGULATIIONS PART 68, SUBPART F.

3. SUGGESTED PANEL OPENING DIMENSIONS.

4. SUGGESTED CLEARANCE BETWEEN TOP OF CONNECTOR AND TOP PANEL OPENING.

5. SEE TABLE FOR COLOR OF LEDS AND NUMBER REQUIRED.

6. THIS MODULAR JACK WITH INTEGRATED LED IS NOT IR REFLOW SOLDERING PROCESS COMPATIBLE.

7. MATERIAL:
HOUSING – HIGH TEMPERATURE THERMOPLASTIC, COLOR: BLACK, UL94V-0
TERMINALS – 0.36[.014] THICK PHOS BRONZE PLATED WITH 3.81µm[.000150] MIN THICK TIN IN SOLDER AREA, 1.27µm[.000050] MIN GOLD IN LOCALIZED PLATE AREA. ENTIRE TERMINAL PLATED WITH 1.27µm[.000050] MIN THICK NICKEL.
SHIELD – 0.196[.0077] THICK COPPER ZINC ALLOY PREPLATED WITH 1.27µm[.000050] MIN SATIN NICKEL WITH 2.03µm[.000080] MIN TIN POST DIPPED ON PCB GROUND TABS
LIGHT EMITTING DIODE (LED) – DIFFUSED EPOXY LENS, 0.51 X 0.51[.020 X .020] CARBON STEEL WIREFRAME LEADS PLATED WITH 8.89µm[.000350] TIN/COPPER OVER 2.03µm[.000080] SILVER OVER 1.02µm[.000040] NICKEL UNDERPLATE OVER 2.03µm[.000080] COPPER UNDERPLATE

8. HOLES ON PCB FOR PCB GROUND TABS ACCORD TO CERTAIN PN.

9. 1761791-5 HAS NO PCB GROUND TABS ON ITS REAR, HOLES ON PCB FOR THESE TABS ARE OPTIONAL.

GREEN	GREEN	7	1761791-5
GREEN	GREEN	7	1761791-4
YELLOW	GREEN	7	1761791-3
GREEN	GREEN	1	1761791-2
YELLOW	GREEN	1	1761791-1
POSITION 2	POSITION 1		PART NUMBER
INDICATOR COLOR FOR EACH HOUSING			

THIS DRAWING IS A CONTROLLED DOCUMENT.

DIMENSIONS: mm [INCHES]

TOLERANCES UNLESS OTHERWISE SPECIFIED:
0 PLC ± –
1 PLC ± –
2 PLC ± 0.25[.01]
3 PLC ± 0.13[.005]
4 PLC ± –
ANGLES ± –

MATERIAL 1 7
FINISH 1 7

DWN 110CT2007 RG/L.A.MAYER
CHK –
APVD –
PRODUCT SPEC 108-1163-4
APPLICATION SPEC 114-2154
WEIGHT –

TE Connectivity

NAME INVERTED MOD JACK ASSEMBLY, 1X2, SHIELDED, PANEL GROUND, LED

SIZE	CAGE CODE	DRAWING NO	RESTRICTED TO
A1	00779	C-1761791	–

CUSTOMER DRAWING SCALE 4:1 SHEET 1 OF 1 REV D2