Chipsmall Limited consists of a professional team with an average of over 10 year of expertise in the distribution of electronic components. Based in Hongkong, we have already established firm and mutual-benefit business relationships with customers from,Europe,America and south Asia,supplying obsolete and hard-to-find components to meet their specific needs.

With the principle of “Quality Parts,Customers Priority,Honest Operation,and Considerate Service”,our business mainly focus on the distribution of electronic components. Line cards we deal with include Microchip,ALPS,ROHM,Xilinx,Pulse,ON,Everlight and Freescale. Main products comprise IC,Modules,Potentiometer,IC Socket,Relay,Connector.Our parts cover such applications as commercial,industrial, and automotives areas.

We are looking forward to setting up business relationship with you and hope to provide you with the best service and solution. Let us make a better world for our industry!

Contact us

Tel: +86-755-8981 8866 Fax: +86-755-8427 6832
Email & Skype: info@chipsmall.com Web: www.chipsmall.com
Address: A1208, Overseas Decoration Building, #122 Zhenhua RD., Futian, Shenzhen, China

NUMBER C-176376

3rd ANGLE PROJECTION

METRIC

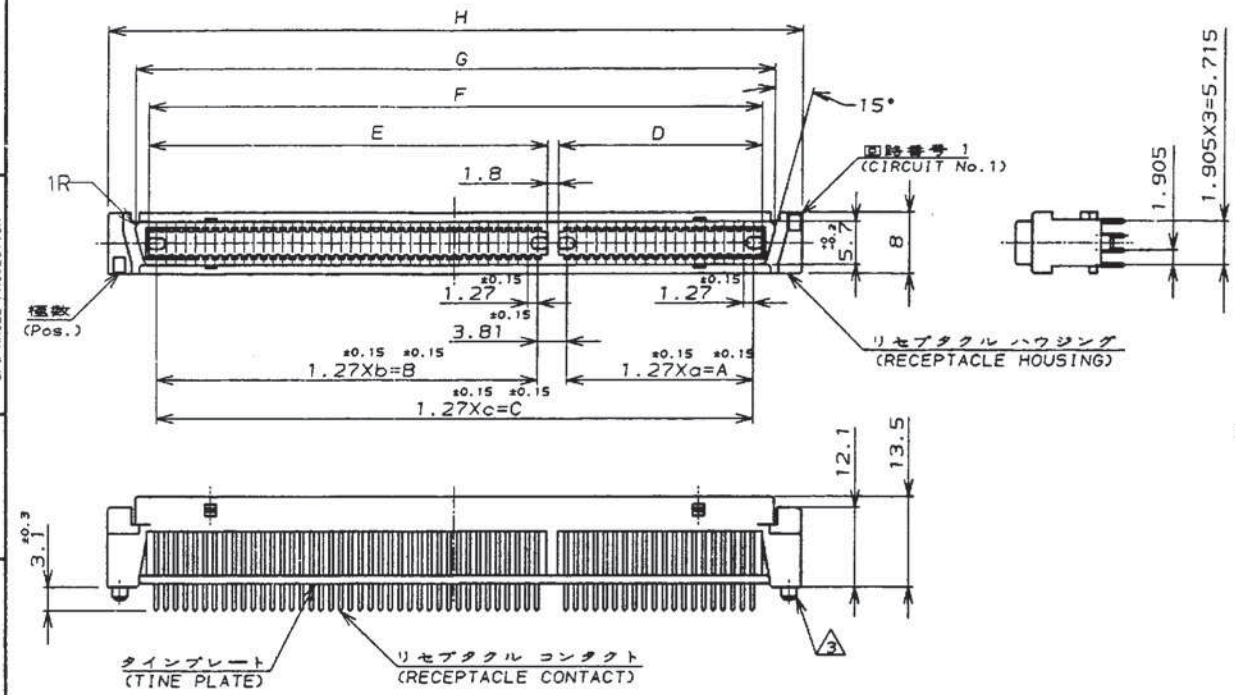

NOTE:

1. MATERIAL: HOUSING: GLASS FILLED 66NYLON (UL 94V-0) BLACK.
   CONTACT: PHOSPHOR-BRONZE
2. FINISH: CONTACT: 0.3μ MIN. Au AT CONTACT AREA, 1μ MIN. TIN LEAD AT TINE, OVER Ni
3. BOSS FOR POSITIONING: P/N -1, -2, -3, -4

注記：

1. 材料：*ハウジング：ガラス入り66ナイロン (UL 94V-0) 色、黒。
   *コンタクト：燐青銅。
2. 表面仕上げ：
   *コンタクト：金面1.3μ以上のニッケル下地メッキに接触部0.3μ以上の金メッキ，脚部1μ以上の半田メッキ
3. ボスは 型番 -1, -2, -3, -4 のみ

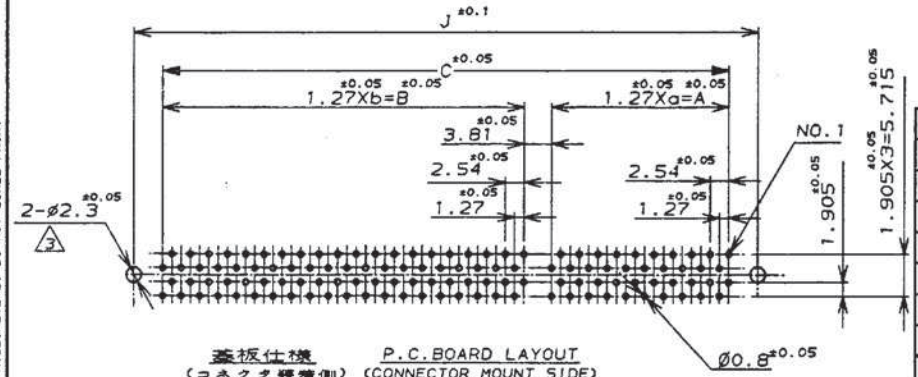

基板仕様 (コネクタ装着側) P.C. BOARD LAYOUT (CONNECTOR MOUNT SIDE)

Pos.	a	A	b	B	c	C	D	E	F	G	H	J	P/N
180	39	49.53	49	62.23	—	115.57	51.53	64.23	117.57	120.66	128.19	125.54	-8
160	29	36.83	49	62.23	—	102.87	38.83	64.23	104.87	107.96	115.49	112.84	-7
140	29	36.83	39	49.53	—	90.17	38.83	51.53	92.17	95.26	102.79	100.14	-6
120	19	24.13	39	49.53	—	77.47	26.13	51.53	79.47	82.56	90.09	87.44	-5
100	—	—	—	—	49	62.23	—	—	64.23	67.32	74.85	72.2	-4
80	—	—	—	—	39	49.53	—	—	51.53	54.62	62.15	59.5	-3
60	—	—	—	—	29	36.83	—	—	38.83	41.92	49.45	46.8	-2
40	—	—	—	—	19	24.13	—	—	26.13	29.22	36.75	34.1	176376-1

LTR	REVISION RECORD	DR	CHK	DATE
A	REVISED (J-13009)	S.I	Y.F	30-JAN-'97
O	RELEASED J-12583	S.I	Y.F	30/NOV-'90

AMP

AMP (JAPAN), LTD.
Tokyo, Japan

WIRE RANGE mm² (AWG -) | INSULATION DIA mm

MATERIAL 1 | FINISH 2

DR. S. ISHIKAWA 3-AUG-'88
DE. S. ISHIKAWA 8-MAR-'90
CHK. Y. FUJIURA 8-MAR-'90
APP. Y. Fujiura 30-JAN-'97

NAME: アンプ FH リセプタクル コネクタ (垂直型)
AMP FH CONNECTOR RECEPTACLE (VERTICAL)

GENERAL TOLERANCE: 0<=x<10 : ±0.2; 10<=x<30 : ±0.25; 30<=x<100 : ±0.3; ANGLES : ±3°

SIZE A3 | LOC J | NUMBER C-176376

SCALE NOT SCALE | REV. A | SHEET 1 OF 1

CUSTOMER DRAWING

DIMENSIONS IN MILLIMETERS. DO NOT SCALE PRINT

PRINT DIST

FIB 4.91

AMP-J REV.10/'83