Chipsmall Limited consists of a professional team with an average of over 10 year of expertise in the distribution of electronic components. Based in Hongkong, we have already established firm and mutual-benefit business relationships with customers from,Europe,America and south Asia,supplying obsolete and hard-to-find components to meet their specific needs.

With the principle of “Quality Parts,Customers Priority,Honest Operation,and Considerate Service”,our business mainly focus on the distribution of electronic components. Line cards we deal with include Microchip,ALPS,ROHM,Xilinx,Pulse,ON,Everlight and Freescale. Main products comprise IC,Modules,Potentiometer,IC Socket,Relay,Connector.Our parts cover such applications as commercial,industrial, and automotives areas.

We are looking forward to setting up business relationship with you and hope to provide you with the best service and solution. Let us make a better world for our industry!

Contact us

Tel: +86-755-8981 8866 Fax: +86-755-8427 6832
Email & Skype: info@chipsmall.com Web: www.chipsmall.com
Address: A1208, Overseas Decoration Building, #122 Zhenhua RD., Futian, Shenzhen, China

THIS DRAWING IS UNPUBLISHED. RELEASED FOR PUBLICATION -,- .
© COPYRIGHT - BY TYCO ELECTRONICS CORPORATION. ALL RIGHTS RESERVED.

LOC	DIST
FT	0

REVISIONS

P	LTR	DESCRIPTION	DATE	DWN	APVD
	0	REVISED PER 0G3B-0619-04	7/16/04	SS	SH

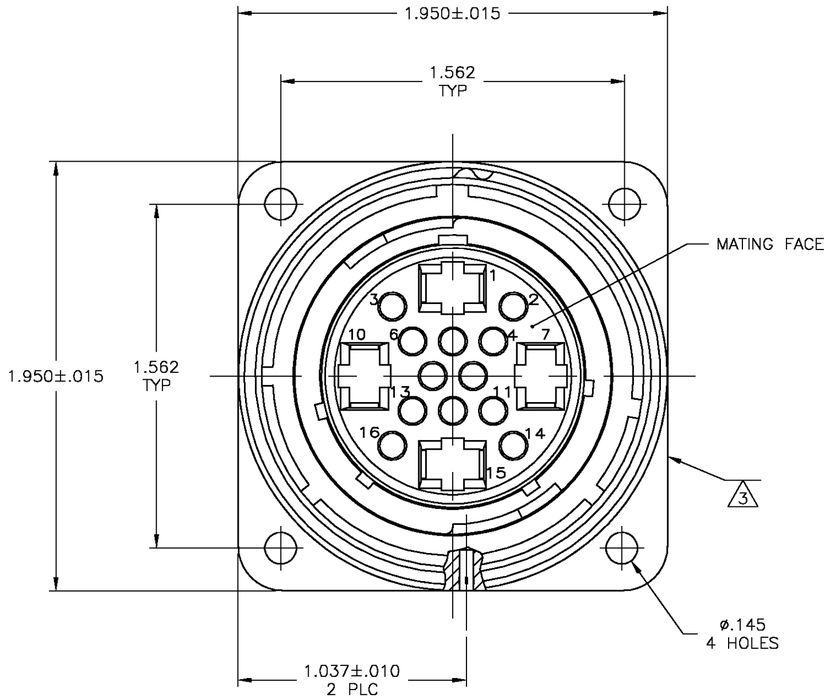

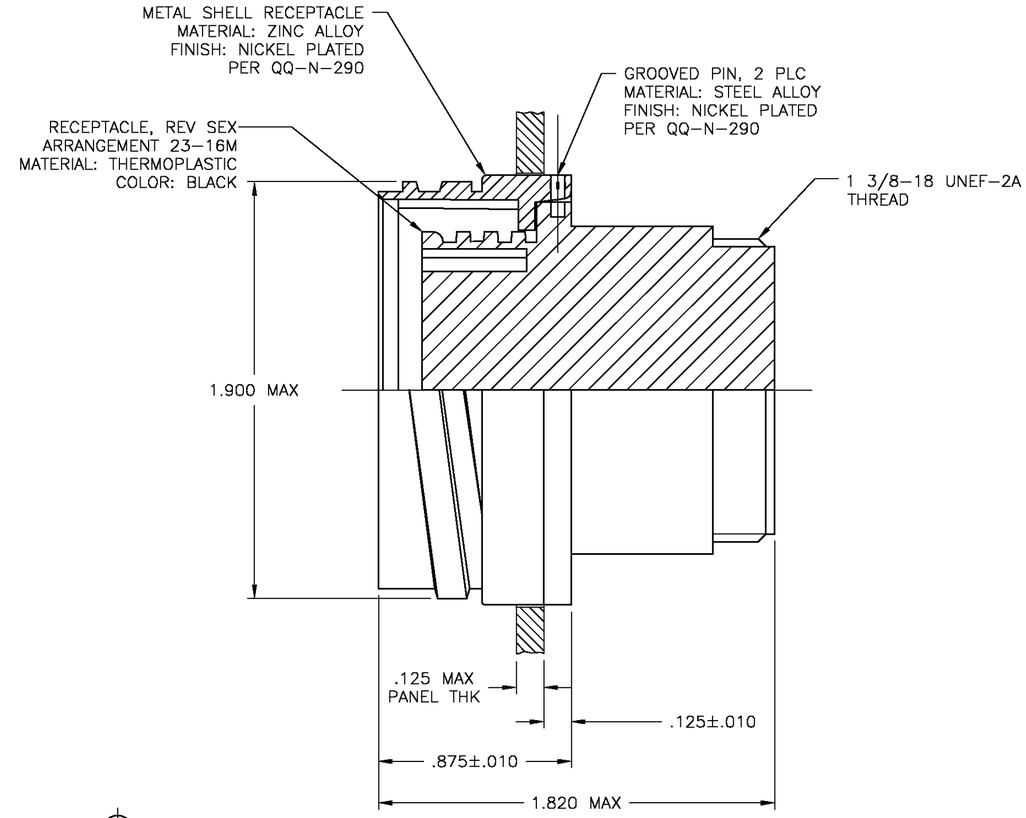

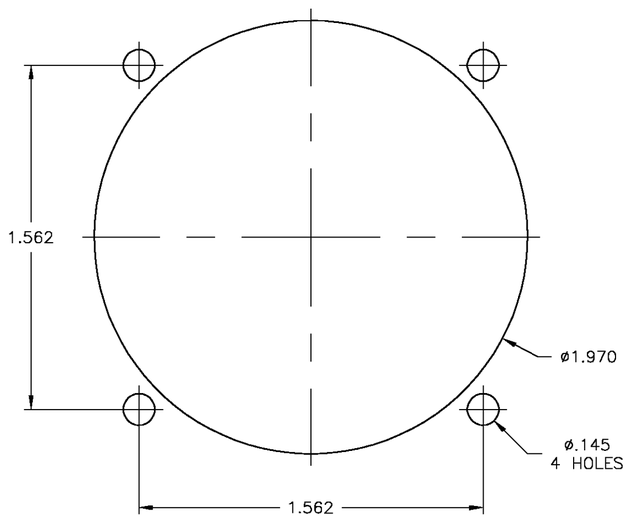

REAR MOUNTED PANEL CUTOUT

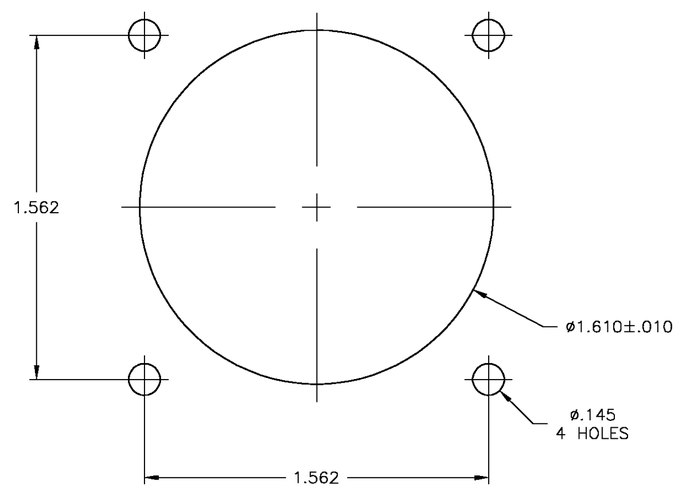

FRONT MOUNTED PANEL CUTOUT

NOTES:

1. THIS CONNECTOR ACCEPTS (12) MULTIMATE SOCKET CONTACTS AND (4) TYPE XII FEMALE CONTACTS.
2. RECEPTACLE MATES WITH 1776089-1.
3. AMP PART NUMBER AND DATE CODE TO BE LOCATED ON EDGE OF FLANGE.

1776088-1
PART NUMBER

THIS DRAWING IS A CONTROLLED DOCUMENT.

DIMENSIONS: INCHES

TOLERANCES UNLESS OTHERWISE SPECIFIED:
0 PLC ± -
1 PLC ± -
2 PLC ± -
3 PLC ± .005
4 PLC ± -
ANGLES ± -

MATERIAL -
FINISH -

DWN S SCHLEGEL 5/25/04
CHK S HEADER 5/25/04
APVD S HEADER 5/25/04
PRODUCT SPEC -
APPLICATION SPEC -
WEIGHT -

Tyco Electronics Corporation
Harrisburg, Pa 17105-3608

NAME
RECEPTACLE ASSEMBLY, REV SEX,
SERIES 1, 28-16, CMC
-

SIZE	CAGE CODE	DRAWING NO	RESTRICTED TO
A2	00779	C-1776088	-

CUSTOMER DRAWING | SCALE 2:1 | SHEET 1 OF 1 | REV 0

1776088

AMP 1471-9 REV 31MAR2000