Chipsmall Limited consists of a professional team with an average of over 10 year of expertise in the distribution of electronic components. Based in Hongkong, we have already established firm and mutual-benefit business relationships with customers from,Europe,America and south Asia,supplying obsolete and hard-to-find components to meet their specific needs.

With the principle of “Quality Parts,Customers Priority,Honest Operation,and Considerate Service”,our business mainly focus on the distribution of electronic components. Line cards we deal with include Microchip,ALPS,ROHM,Xilinx,Pulse,ON,Everlight and Freescale. Main products comprise IC,Modules,Potentiometer,IC Socket,Relay,Connector.Our parts cover such applications as commercial,industrial, and automotives areas.

We are looking forward to setting up business relationship with you and hope to provide you with the best service and solution. Let us make a better world for our industry!

Contact us

Tel: +86-755-8981 8866 Fax: +86-755-8427 6832
Email & Skype: info@chipsmall.com Web: www.chipsmall.com
Address: A1208, Overseas Decoration Building, #122 Zhenhua RD., Futian, Shenzhen, China

Printed-circuit board connector - ICC 2,5/11-STZFD-5,08 - 1823707

Please be informed that the data shown in this PDF Document is generated from our Online Catalog. Please find the complete data in the user's documentation. Our General Terms of Use for Downloads are valid
(http://phoenixcontact.com/download)

The illustration shows a 15-position version

Plug component, Nominal current: 12 A, Rated voltage (III/2): 320 V, Number of positions: 11, Pitch: 5.08 mm, Connection method: Crimp connection, Color: green, Corresponding male crimp contacts with current [A] and conductor cross section range [mm²] data: 10A/ICC-MT 0,5-1,0 (3190577); 10A/ICC-MT 0,5-1,0 BA (3190603); 12A/ICC-MT 1,5-2,5 (3190580); 12A/ICC-MT 1,5-2,5 BA (3190593). BA = Bandkontakte

Key commercial data

Packing unit	1 pc
Weight per Piece (excluding packing)	7.5 GRM
Custom tariff number	85366990
Country of origin	Poland

Technical data

Dimensions

Pitch	5.08 mm
Dimension a	50.8 mm

General

Range of articles	ICC 2,5/..-STZFD
Insulating material group	I
Rated surge voltage (III/3)	4 kV
Rated surge voltage (III/2)	4 kV
Rated surge voltage (II/2)	4 kV
Rated voltage (III/3)	250 V
Rated voltage (III/2)	320 V
Rated voltage (II/2)	630 V
Connection in acc. with standard	EN-VDE
Nominal current I_N	12 A
Nominal cross section	2.5 mm²

Printed-circuit board connector - ICC 2,5/11-STZFD-5,08 - 1823707

Technical data

General

Maximum load current	12 A
Insulating material	PA
Inflammability class according to UL 94	V0
Number of positions	11

Connection data

Conductor cross section stranded min.	0.5 mm²
Conductor cross section stranded max.	2.5 mm²
Conductor cross section AWG/kcmil min.	20
Conductor cross section AWG/kcmil max	14
Minimum AWG according to UL/CUL	20
Maximum AWG according to UL/CUL	14

Classifications

eCl@ss

eCl@ss 4.0	272607xx
eCl@ss 4.1	27260701
eCl@ss 5.0	27260701
eCl@ss 5.1	27260701
eCl@ss 6.0	27260704
eCl@ss 7.0	27440402
eCl@ss 8.0	27440402

ETIM

ETIM 3.0	EC001121
ETIM 4.0	EC002637
ETIM 5.0	EC002637

UNSPSC

UNSPSC 6.01	30211810
UNSPSC 7.0901	39121409
UNSPSC 11	39121409
UNSPSC 12.01	39121409
UNSPSC 13.2	39121409

Drawings

Printed-circuit board connector - ICC 2,5/11-STZFD-5,08 - 1823707

Drilling diagram

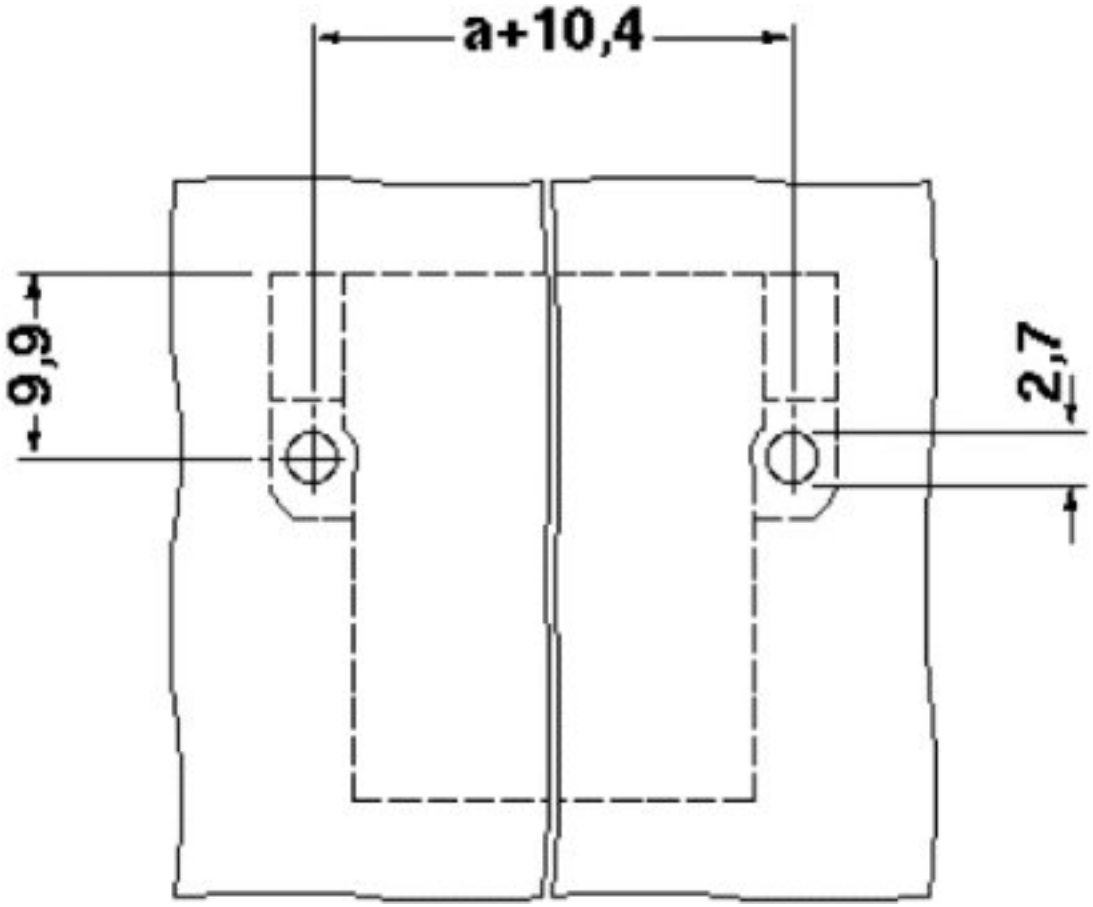

Dimensioned drawing

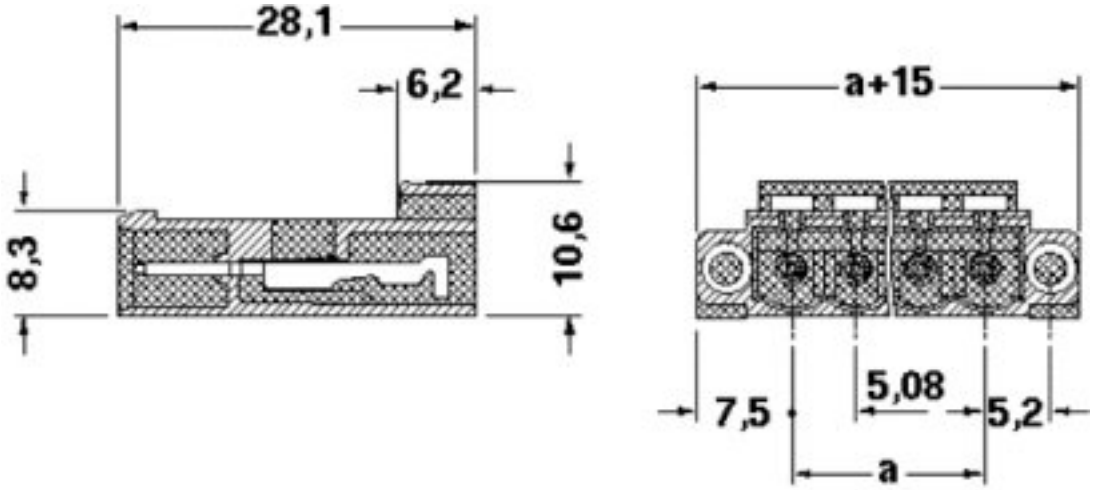

Phoenix Contact 2014 © - all rights reserved
http://www.phoenixcontact.com