Chipsmall Limited consists of a professional team with an average of over 10 year of expertise in the distribution of electronic components. Based in Hongkong, we have already established firm and mutual-benefit business relationships with customers from,Europe,America and south Asia,supplying obsolete and hard-to-find components to meet their specific needs.

With the principle of “Quality Parts,Customers Priority,Honest Operation,and Considerate Service”,our business mainly focus on the distribution of electronic components. Line cards we deal with include Microchip,ALPS,ROHM,Xilinx,Pulse,ON,Everlight and Freescale. Main products comprise IC,Modules,Potentiometer,IC Socket,Relay,Connector.Our parts cover such applications as commercial,industrial, and automotives areas.

We are looking forward to setting up business relationship with you and hope to provide you with the best service and solution. Let us make a better world for our industry!

Contact us

Tel: +86-755-8981 8866 Fax: +86-755-8427 6832
Email & Skype: info@chipsmall.com Web: www.chipsmall.com
Address: A1208, Overseas Decoration Building, #122 Zhenhua RD., Futian, Shenzhen, China

THIS DRAWING IS UNPUBLISHED. RELEASED FOR PUBLICATION .19 .
© COPYRIGHT 19 BY AMP INCORPORATED. ALL RIGHTS RESERVED.

LOC	DIST
CE	00

REVISIONS

P	LTR	DESCRIPTION	DATE	DWN	APVD
	I	NPR 05-764	15NOV2005	BB	DK
	A	REVISE PER ECR-06-007845	07APR2006	BB	DK
	B	REVISE PER ECR-07-001527	19FEB2007	BB	DK

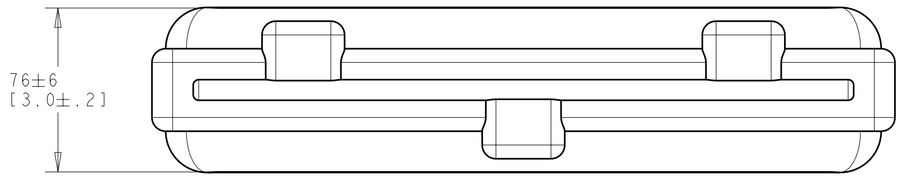

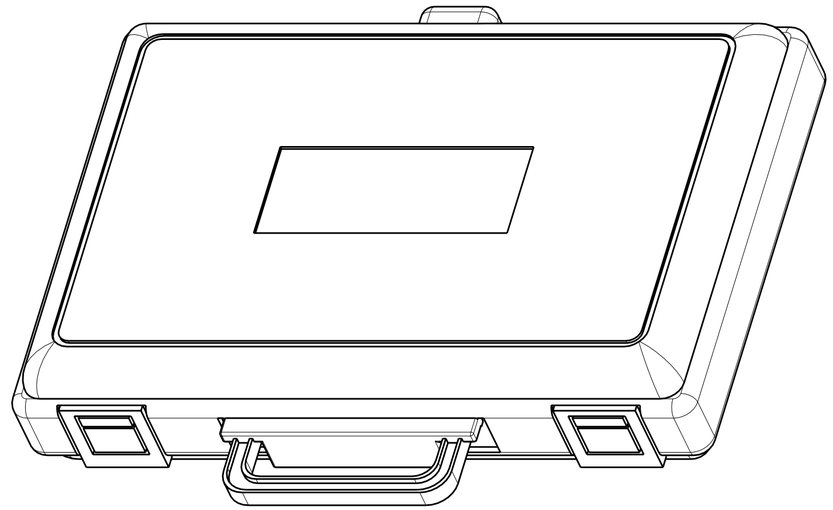

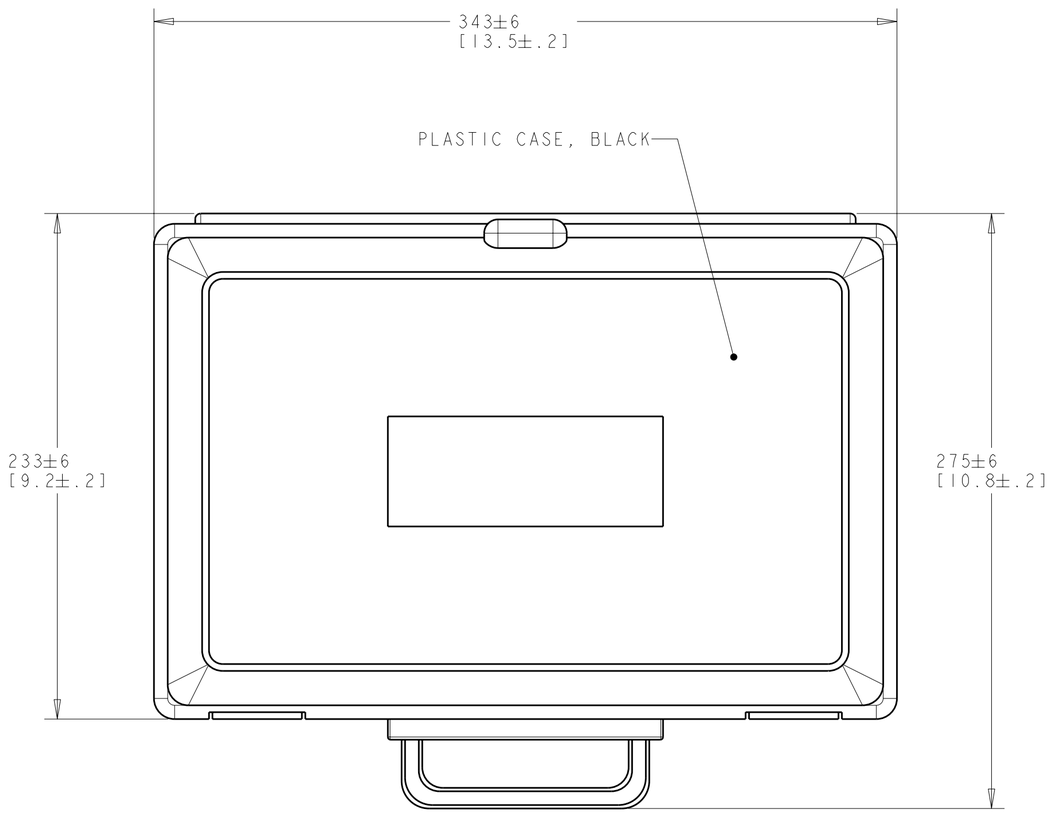

1. 1828867-1 INCLUDES LC TO LC SIMPLEX CABLE ASSEMBLY (2), LC TO SC SIMPLEX CABLE ASSEMBLY (2), 50/125 MANDREL (2) AND DUPLEX CLIPS (6)

2. 1828867-2 INCLUDES LC TO LC SIMPLEX CABLE ASSEMBLY (2), LC TO ST SIMPLEX CABLE ASSEMBLY (2), 50/125 MANDREL (2) AND DUPLEX CLIPS (6)

3. 1828867-3 INCLUDES LC TO LC CABLE ASSEMBLY (4), 50/125 MANDREL (2) AND DUPLEX CLIPS (6)

	TEST EQUIPMENT CONNECTION	PART NUMBER
OBSOLETE	LC SIMPLEX	1828867-6
OBSOLETE	ST SIMPLEX	1828867-5
OBSOLETE	SC SIMPLEX	1828867-4
	LC	1828867-3
	ST SIMPLEX	1828867-2
	SC SIMPLEX	1828867-1

THIS DRAWING IS A CONTROLLED DOCUMENT FOR AMP INCORPORATED. IT IS SUBJECT TO CHANGE AND THE CONTROLLING ENGINEERING ORGANIZATION SHOULD BE CONTACTED FOR THE LATEST REVISION.

DIMENSIONS: mm [INCHES]

TOLERANCES UNLESS OTHERWISE SPECIFIED:
0 PLC ±-
1 PLC ±-
2 PLC ±-
3 PLC ±-
4 PLC ±-
ANGLES ±-

MATERIAL -
FINISH -

DWN B.BRIGGS 15NOV2005
CHK D.KIRSCH 15NOV2005
APVD S.BUCHTER 15NOV2005

PRODUCT SPEC -
APPLICATION SPEC -
WEIGHT -

CUSTOMER DRAWING

AMP Incorporated
Harrisburg, PA 17105-3608

NAME LC TEST CABLE KIT, 50/125um -

SIZE	CAGE CODE	DRAWING NO
A2	00779	C-1828867

SCALE NTS SHEET 1 OF 1 REV B

AMP 1471-9 REV 09MAY94

Pro/ENGINEER DRAWING