Chipsmall Limited consists of a professional team with an average of over 10 year of expertise in the distribution of electronic components. Based in Hongkong, we have already established firm and mutual-benefit business relationships with customers from,Europe,America and south Asia,supplying obsolete and hard-to-find components to meet their specific needs.

With the principle of “Quality Parts,Customers Priority,Honest Operation,and Considerate Service”,our business mainly focus on the distribution of electronic components. Line cards we deal with include Microchip,ALPS,ROHM,Xilinx,Pulse,ON,Everlight and Freescale. Main products comprise IC,Modules,Potentiometer,IC Socket,Relay,Connector.Our parts cover such applications as commercial,industrial, and automotives areas.

We are looking forward to setting up business relationship with you and hope to provide you with the best service and solution. Let us make a better world for our industry!

Contact us

Tel: +86-755-8981 8866 Fax: +86-755-8427 6832
Email & Skype: info@chipsmall.com Web: www.chipsmall.com
Address: A1208, Overseas Decoration Building, #122 Zhenhua RD., Futian, Shenzhen, China

THIS DRAWING IS UNPUBLISHED. RELEASED FOR PUBLICATION MARCH ,2006.
© COPYRIGHT 2006 BY TYCO ELECTRONICS CORPORATION. ALL INTERNATIONAL RIGHTS RESERVED.

LOC	DIST
E	B

REVISIONS

P	LTR	DESCRIPTION	DATE	DWN	APVD
	B	ECR-07-011675	09/05/07	AM	FWK
	B1	ECR-10-015172	13AUG10	RK	JK

NOTES:

1. ELECTRICAL DATA: CONTACT RESISTANCE: 10 mOhm MAX
   INSULATION RESISTANCE: 100 MOhm MIN at 500VDC
   CURRENT RATING: 5 AMPS
   BREAKDOWN VOLTAGE: 500 VAC MIN PER MINUTE
2. ENVIRONMENTAL: OPERATING TEMPERATURE: −25°C TO +90°C
   SEALING REQUIREMENTS: IP67
3. PROD SPEC: 108−3641
4. PACKAGING: 107−3334
5. FOR TECHNICAL DATA REFER TO YOUR LOCAL TYCO ELECTRONICS SALES OFFICE
6. ALL DIMENSIONS ARE NOMINAL FOR REFERENCE ONLY UNLESS OTHERWISE STATED

ITEM	DESCRIPTION	MATERIAL	FINISH/COLOUR	QTY
1	SCREW NUT	ZINC DIE CAST	2.5µm NICKEL PLATED	1
2	CONNECTOR BODY	POLYURETHANE	BLACK	1
3	SOCKET CONTACT	BRASS	0.15µm GOLD OVER NICKEL	3
4	3 CORE CABLE (CORES 0.34mm²)	PU JACKET	BLACK	1
5	'O' RING	VITON	GREEN	1

PIN ASSIGNMENTS
FRONT VIEW

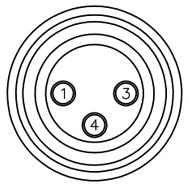

PIN	WIRE COLOUR
4	BLACK
3	BLUE
1	BROWN

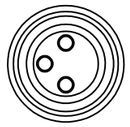

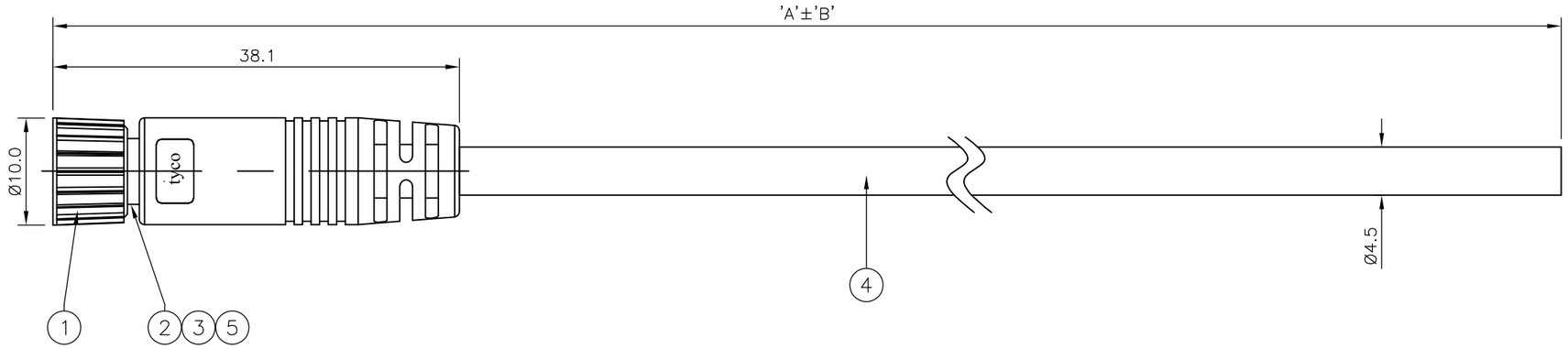

	DIM A	TOL 'B'	DESCRIPTION	PART NUMBER
OBSOLETE	~~10000~~	~~500 mm~~	~~M8 STRAIGHT FEMALE CONNECTOR 10.0m CABLE~~	~~1838283-5~~
OBSOLETE	~~7000~~	~~350 mm~~	~~M8 STRAIGHT FEMALE CONNECTOR 7.0m CABLE~~	~~1838283-4~~
	5000	250 mm	M8 STRAIGHT FEMALE CONNECTOR 5.0m CABLE	1838283-3
OBSOLETE	~~3000~~	~~150 mm~~	~~M8 STRAIGHT FEMALE CONNECTOR 3.0m CABLE~~	~~1838283-2~~
OBSOLETE	~~2000~~	~~100 mm~~	~~M8 STRAIGHT FEMALE CONNECTOR 2.0m CABLE~~	~~1838283-1~~

THIS DRAWING IS A CONTROLLED DOCUMENT.

DIMENSIONS: mm

TOLERANCES UNLESS OTHERWISE SPECIFIED:
0 PLC ± –
1 PLC ± –
2 PLC ± –
3 PLC ± –
4 PLC ± –
ANGLES ± –

MATERIAL –
FINISH –

DWN MANJUNATH.T.N 03APR06
CHK F.WHEELER-KING 07AUG06
APVD F.WHEELER-KING 07AUG06
PRODUCT SPEC —
APPLICATION SPEC —
WEIGHT —

Tyco Electronics
Tyco Electronics Corporation
Bideford, UK, EX39 4HE

NAME
M8 STRAIGHT FEMALE CONNECTOR WITH STRAIN RELIEF 3 POSITION, PU CABLE

SIZE	CAGE CODE	DRAWING NO	RESTRICTED TO
A3	00779	C-1838283	—

CUSTOMER DRAWING

SCALE	SHEET	REV
NTS	1 OF 1	B1