Chipsmall Limited consists of a professional team with an average of over 10 year of expertise in the distribution of electronic components. Based in Hongkong, we have already established firm and mutual-benefit business relationships with customers from,Europe,America and south Asia,supplying obsolete and hard-to-find components to meet their specific needs.

With the principle of “Quality Parts,Customers Priority,Honest Operation,and Considerate Service”,our business mainly focus on the distribution of electronic components. Line cards we deal with include Microchip,ALPS,ROHM,Xilinx,Pulse,ON,Everlight and Freescale. Main products comprise IC,Modules,Potentiometer,IC Socket,Relay,Connector.Our parts cover such applications as commercial,industrial, and automotives areas.

We are looking forward to setting up business relationship with you and hope to provide you with the best service and solution. Let us make a better world for our industry!

# Contact us

Tel: +86-755-8981 8866 Fax: +86-755-8427 6832
Email & Skype: info@chipsmall.com Web: www.chipsmall.com
Address: A1208, Overseas Decoration Building, #122 Zhenhua RD., Futian, Shenzhen, China

THIS DRAWING IS UNPUBLISHED. RELEASED FOR PUBLICATION MARCH ,2006.
© COPYRIGHT 2006 BY TYCO ELECTRONICS CORPORATION. ALL RIGHTS RESERVED.

| LOC | DIST |
|---|---|
| E | B |

REVISIONS

| P | LTR | DESCRIPTION | DATE | DWN | APVD |
|---|---|---|---|---|---|
| | B | ECR-07-012186 | 22/05/07 | AM | FWK |

NOTES:

1. ELECTRICAL DATA: CONTACT RESISTANCE: 10 mOhm MAX
   INSULATION RESISTANCE: 100 MOhm MIN at 500VDC
   CURRENT RATING: 5 AMPS
   BREAKDOWN VOLTAGE: 500 VAC MIN PER MINUTE
2. ENVIRONMENTAL: OPERATING TEMPERATURE: −20°C TO +80°C
   SEALING REQUIREMENTS: IP67
3. PROD SPEC: 108−3641
4. PACKAGING: 107−3334
5. FOR TECHNICAL DATA REFER TO YOUR LOCAL TYCO ELECTRONICS SALES OFFICE
6. ALL DIMENSIONS ARE NOMINAL FOR REFERENCE ONLY UNLESS OTHERWISE STATED

| ITEM | DESCRIPTION | MATERIAL | FINISH/COLOUR | QTY |
|---|---|---|---|---|
| 1 | SCREW NUT | ZINC DIE CAST | 2.5µm NICKEL PLATED | 1 |
| 2 | CONNECTOR BODY | GF NYLON | BLACK | 1 |
| 3 | PIN CONTACT | BRASS | 0.15µm GOLD OVER NICKEL | 4 |
| 4 | 4 CORE CABLE (CORES 22AWG TO UL2464) | PVC JACKET UV RESISTANT | BLACK | 1 |
| 5 | SHIELD | BRASS | – | 1 |
| 6 | SHIELDING FOIL | COPPER | – | 1 |
| 7 | ADHESIVE | – | – | 1 |

PIN ASSIGNMENTS
FRONT VIEW

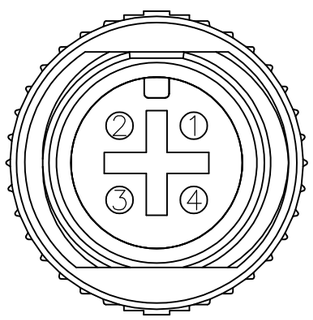


| SHIELD | DRAIN WIRE |
|---|---|
| 4 | BLACK |
| 3 | BLUE |
| 2 | WHITE |
| 1 | BROWN |
| PIN | WIRE COLOUR |

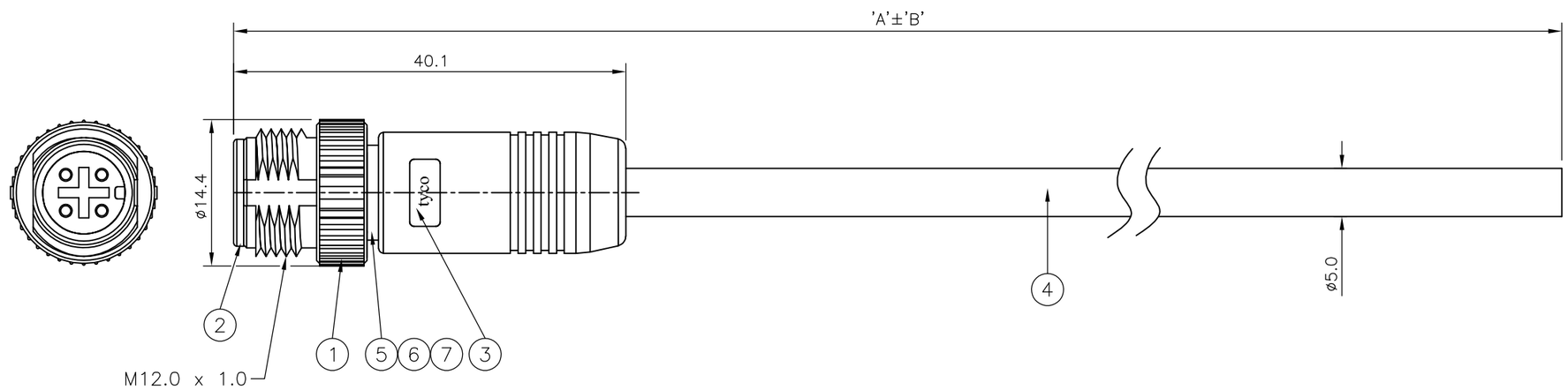


| DIM A | TOL 'B' | DESCRIPTION | PART NUMBER |
|---|---|---|---|
| 10000 | 500 mm | M12 STRAIGHT MALE CONNECTOR 10.0m CABLE | 1838367−5 |
| 7000 | 350 mm | M12 STRAIGHT MALE CONNECTOR 7.0m CABLE | 1838367−4 |
| 5000 | 250 mm | M12 STRAIGHT MALE CONNECTOR 5.0m CABLE | 1838367−3 |
| 3000 | 150 mm | M12 STRAIGHT MALE CONNECTOR 3.0m CABLE | 1838367−2 |
| 2000 | 100 mm | M12 STRAIGHT MALE CONNECTOR 2.0m CABLE | 1838367−1 |

THIS DRAWING IS A CONTROLLED DOCUMENT.

DIMENSIONS: mm

TOLERANCES UNLESS OTHERWISE SPECIFIED:
0 PLC ± –
1 PLC ± –
2 PLC ± –
3 PLC ± –
4 PLC ± –
ANGLES ± –

MATERIAL –
FINISH –

DWN MANJUNATH.T.N 10APR06
CHK F.WHEELER−KING 04MAY06
APVD F.WHEELER−KING 04MAY06
PRODUCT SPEC –
APPLICATION SPEC –
WEIGHT –

tyco Electronics
Tyco Electronics Corporation
Bideford, UK, EX39 4HE

NAME
M12 SHIELDED, STRAIGHT MALE CONNECTOR
WITHOUT STRAIN RELIEF 4 POSITION, PVC CABLE

| SIZE | CAGE CODE | DRAWING NO | RESTRICTED TO |
|---|---|---|---|
| A3 | 00779 | C-1838367 | – |

CUSTOMER DRAWING

| SCALE | SHEET | REV |
|---|---|---|
| NTS | 1 OF 1 | B |

AMP 1470−19 REV 31MAR2000