Chipsmall Limited consists of a professional team with an average of over 10 year of expertise in the distribution of electronic components. Based in Hongkong, we have already established firm and mutual-benefit business relationships with customers from,Europe,America and south Asia,supplying obsolete and hard-to-find components to meet their specific needs.

With the principle of “Quality Parts,Customers Priority,Honest Operation,and Considerate Service”,our business mainly focus on the distribution of electronic components. Line cards we deal with include Microchip,ALPS,ROHM,Xilinx,Pulse,ON,Everlight and Freescale. Main products comprise IC,Modules,Potentiometer,IC Socket,Relay,Connector.Our parts cover such applications as commercial,industrial, and automotives areas.

We are looking forward to setting up business relationship with you and hope to provide you with the best service and solution. Let us make a better world for our industry!

Contact us

Tel: +86-755-8981 8866 Fax: +86-755-8427 6832
Email & Skype: info@chipsmall.com Web: www.chipsmall.com
Address: A1208, Overseas Decoration Building, #122 Zhenhua RD., Futian, Shenzhen, China

THIS DRAWING IS UNPUBLISHED. RELEASED FOR PUBLICATION 20
© COPYRIGHT 20 BY TYCO ELECTRONICS CORPORATION. ALL RIGHTS RESERVED.

LOC	DIST
ES	00

REVISIONS

P	LTR	DESCRIPTION	DATE	DWN	APVD
	A4	REV PER ECR-11-006325	27MAR2011	IL	SZ
	A5	REV PER ECR-13-004638	20MAR2013	ML	SZ

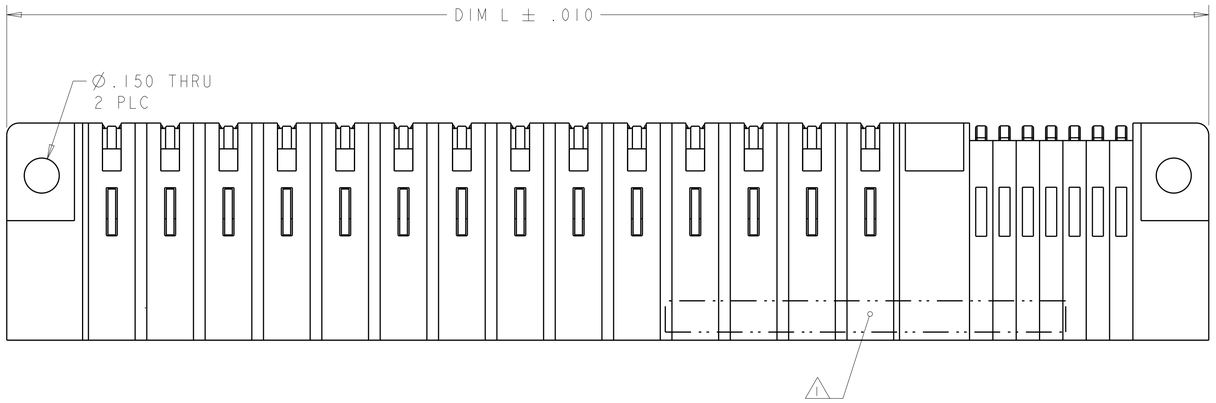

1. "AMP", PART NUMBER, AND DATECODE TO BE MARKED IN AREA SHOWN.
2. MATERIAL: HOUSING - GLASS FILLED HIGH TEMP THERMO PLASTIC, UL94 V-0
   SIGNAL CONTACT - COPPER ALLOY
   POWER CONTACT - HIGH CONDUCTIVITY COPPER ALLOY
3. CONTACT PLATING: NOBLE METAL PLATING ON CONTACT FUNCTIONAL AREA OF POWER AND SIGNAL CONTACTS.
4. MECHANICAL CONNECTOR KEEP OUT ZONE.
5. DATUM AND BASIC DIMENSIONS ESTABLISHED BY CUSTOMER.
6. PCB - HOLE DIAMETERS ARE FINISHED HOLE SIZE.
7. PCB - .0453±.0010 DRILLED HOLES PLATED WITH .0003 MIN Sn OVER .001 TO .003 Cu PLATING TO ACHIEVE A .040 DIAMETER HOLE.
8. OPTIONAL CENTER MODULE
9. NOT RELEASED FOR PRODUCTION
10. VARIABLE DIMENSIONS SHOWN ON VIEW (SHEET 3 AND 4).

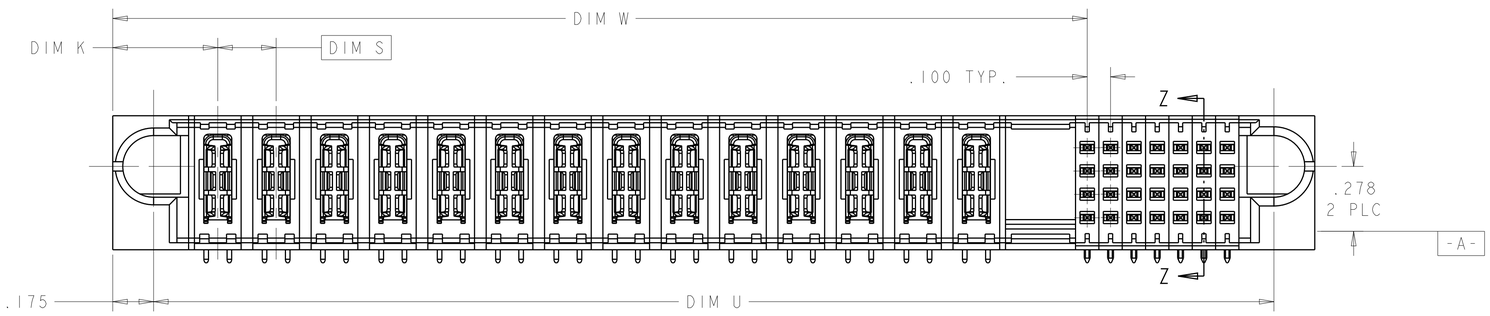

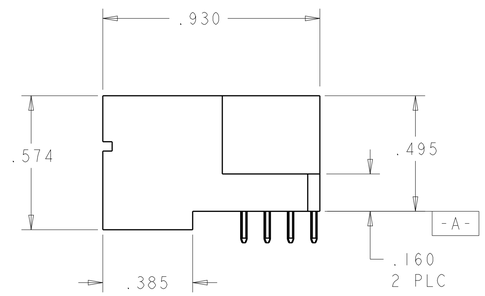

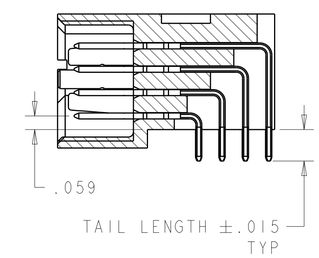

SECTION Z-Z

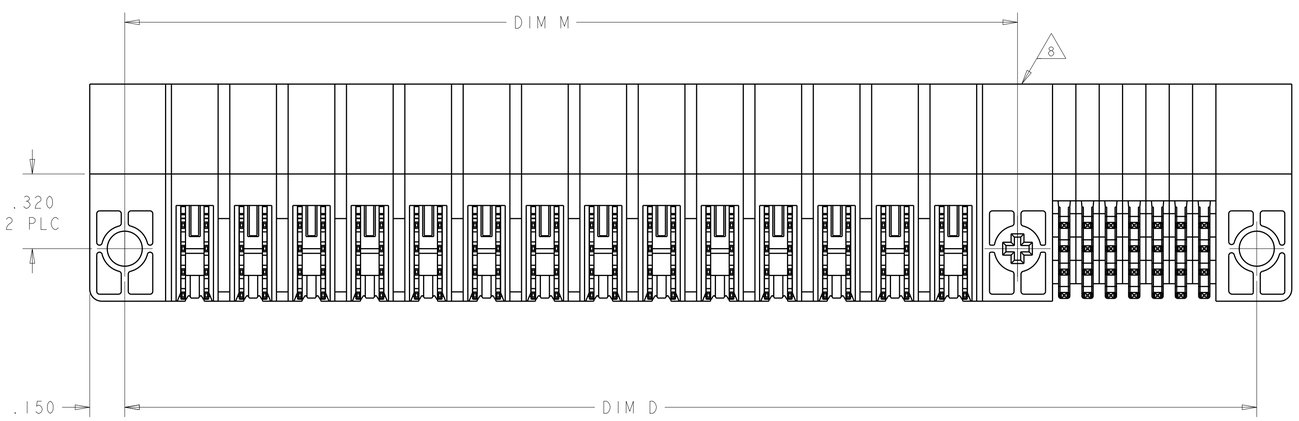

DIM U	DIM S	DIM W	DIM D	DIM M	DIM L	DIM K	DESCRIPTION	PART NUMBER
4.425	.200	2.200	4.475		4.775	.450	9P + 92S	1892222-9
6.075	.200	1.375	6.125	-	6.425	.375	36S + 24P	1892222-8
5.100	10	2.375	5.150	-	5.450	.450	8P + 112S	1892222-7
3.800	10	3.175	3.850	-	4.150	.450	12P + 28S	1892222-6
2.275	10	2.050	2.325	-	2.625	.450	5P + 24S	1892222-5
4.500	.250	3.875	4.550	-	4.850	.450	14P + 28S	1892222-4
3.875	10	3.550	3.925	-	4.225	.475	3ACP + 9P + 16S	1892222-3
3.875	10	3.550	3.925	-	4.225	.475	3ACP + 9P + 16S	1892222-2
3.875	10	3.550	3.925	-	4.225	.475	3ACP + 9P + 16S	1892222-1

THIS DRAWING IS A CONTROLLED DOCUMENT FOR TYCO ELECTRONICS CORPORATION IT IS SUBJECT TO CHANGE AND THE CONTROLLING ENGINEERING ORGANIZATION SHOULD BE CONTACTED FOR THE LATEST REVISION.

DIMENSIONS: INCHES

TOLERANCES UNLESS OTHERWISE SPECIFIED:
0 PLC ±-
1 PLC ±-
2 PLC ±.01
3 PLC ±.005
4 PLC ±.0020
ANGLES ±2°

MATERIAL - 2
FINISH - 3

DWN Alex Shoal SEP01'06
CHK Zhao Suny SEP01'06
APVD Steven Yao SEP01'06

PRODUCT SPEC 108-1973
APPLICATION SPEC 114-13038
WEIGHT -

TE connectivity
Tyco Electronics
Shanghai R.P.C. 200233

NAME RIGHT ANGLE SOLDER HEADER ASSEMBLY MULTI-BEAM XL USING MBXLE CONTACTS
-

SIZE	CAGE CODE	DRAWING NO	RESTRICTED TO
A1	00779	C-1892222	-

CUSTOMER DRAWING | SCALE 4:1 | SHEET 1 OF 6 | REV A5

THIS DRAWING IS UNPUBLISHED. RELEASED FOR PUBLICATION 20
© COPYRIGHT 20 BY TYCO ELECTRONICS CORPORATION. ALL RIGHTS RESERVED.

LOC	DIST
ES	00

REVISIONS

P	LTR	DESCRIPTION	DATE	DWN	APVD
	-	SEE SHEET 1	-	-	-

ASSY PART NUMBER	ROWS
1892222-4	D C B A
14P + 28S	

POWER: P1 P2 P3 P4 P5 P6 P7 P8 P9 P10 P11 P12 P13 P14 — TM
SIGNAL: 1 2 3 4 5 6 7 — E F G S

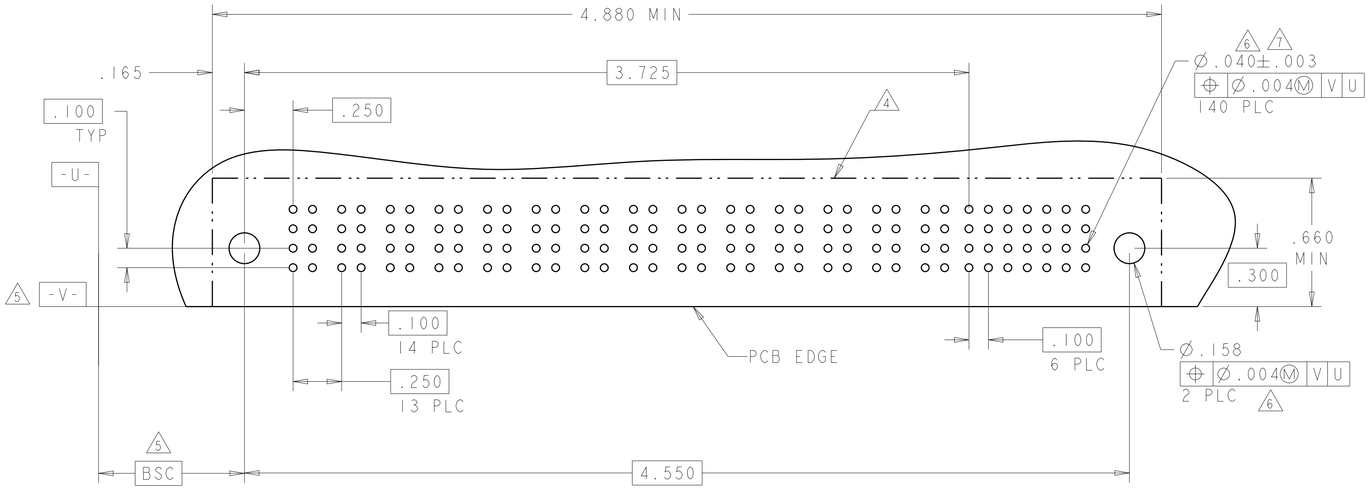

PART NUMBER	ROWS
1892222-5	D C B A
5P + 24S	

POWER: P1 P2 P3 P4 P5 — TM
SIGNAL: L 2 3 4 5 6 — J K N S

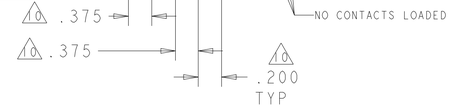

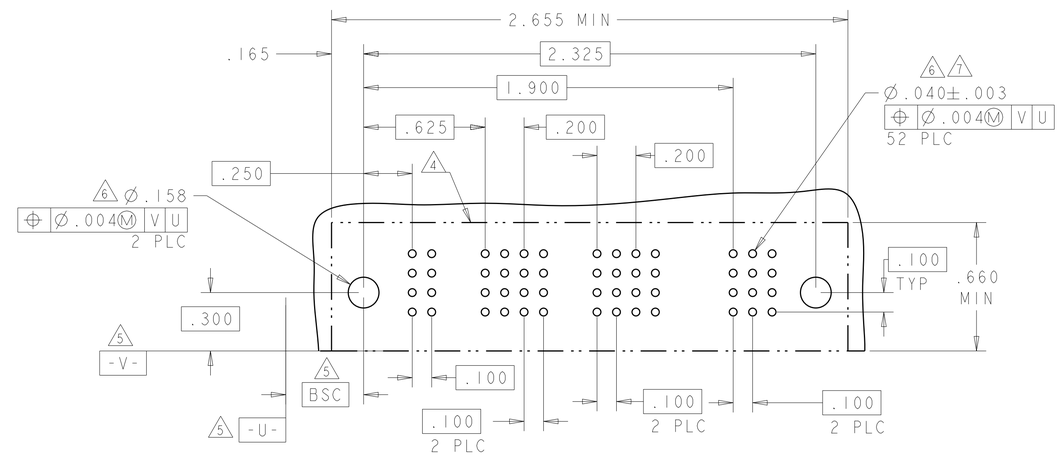

PART NUMBER	ROWS
1892222-6	D C B A
12P + 28S	

POWER: P1 P2 P3 P4 P5 P6 P7 P8 P9 P10 P11 P12 — TM
SIGNAL: 1 2 3 4 5 6 7 — J K N S

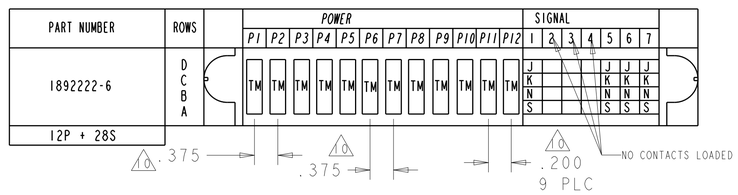

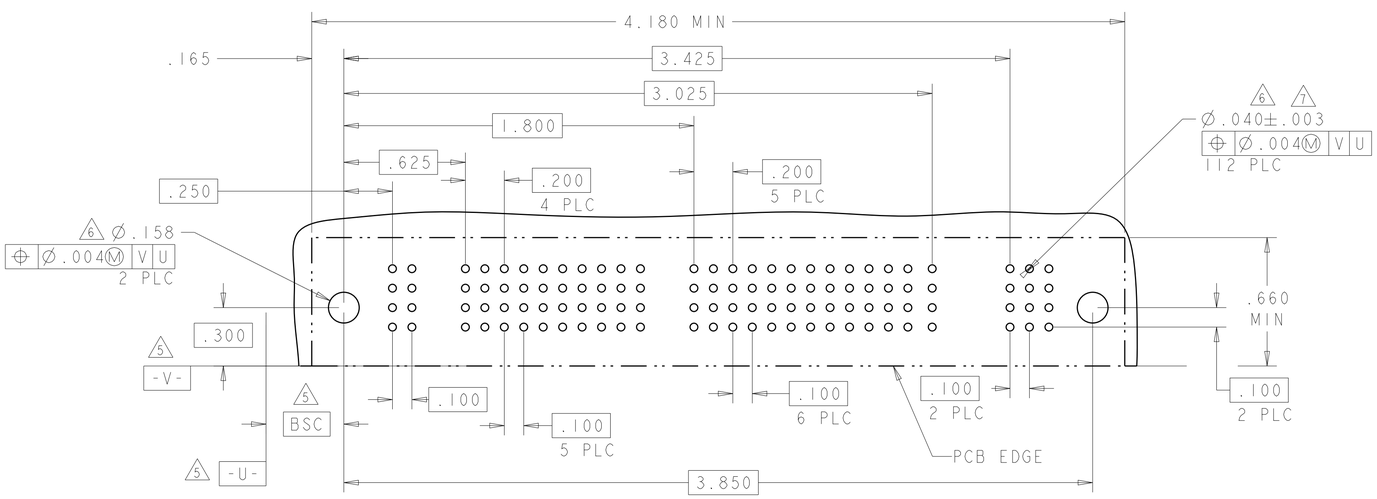

Z	STD	.090	D
Y	STD	.090	C
R	STD	.090	B
O	STD	.090	A
A4	MLBF	.090	D
A3	MLBF	.090	C
A2	MLBF	.090	B
A1	MLBF	.090	A
E	MLBF	.135	D
F	MLBF	.135	C
G	MLBF	.135	B
H	MLBF	.135	A
J	STD	.135	D
K	STD	.135	C
N	STD	.135	B
S	STD	.135	A
CODE	MATING SEQUENCE	TAIL LENGTH	ROW
SIGNAL CONTACT			

TM	.135
CODE	TAIL LENGTH
POWER CONTACT	

THIS DRAWING IS A CONTROLLED DOCUMENT FOR TYCO ELECTRONICS CORPORATION. IT IS SUBJECT TO CHANGE AND THE CONTROLLING ENGINEERING ORGANIZATION SHOULD BE CONTACTED FOR THE LATEST REVISION.

DIMENSIONS: INCHES

TOLERANCES UNLESS OTHERWISE SPECIFIED:
0 PLC ±-
1 PLC ±-
2 PLC ±.01
3 PLC ±.005
4 PLC ±.0020
ANGLES ±2°

MATERIAL - -
FINISH - -

DWN	Alex Shoal	SEP01'06
CHK	Zhao Suny	SEP01'06
APVD	Steven Yao	SEP01'06

PRODUCT SPEC 108-1973
APPLICATION SPEC 114-13038
WEIGHT -

Tyco Electronics
Shanghai R.P.C. 200233

NAME RIGHT ANGLE SOLDER HEADER ASSEMBLY MULTI-BEAM XL USING MBXLE CONTACTS -

SIZE	CAGE CODE	DRAWING NO	RESTRICTED TO
A1	00779	C-1892222	-

CUSTOMER DRAWING | SCALE 4:1 | SHEET 2 OF 6 | REV A5

THIS DRAWING IS UNPUBLISHED. RELEASED FOR PUBLICATION 20
© COPYRIGHT 20 BY TYCO ELECTRONICS CORPORATION. ALL RIGHTS RESERVED.

LOC	DIST
ES	00

REVISIONS

P	LTR	DESCRIPTION	DATE	DWN	APVD
	-	SEE SHEET 1	-	-	-

PART NUMBER	ROWS
1892222-7	D C B A
8P + 112S	

POWER: P1 P2 P3 P4 P5 P6 P7 P8 — TM

SIGNAL: 1 2 3 4 5 6 7 8 9 10 11 12 13 14 15 16 17 18 19 20 21 22 23 24 25 26 27 28

J K N S

NO CONTACTS LOADED

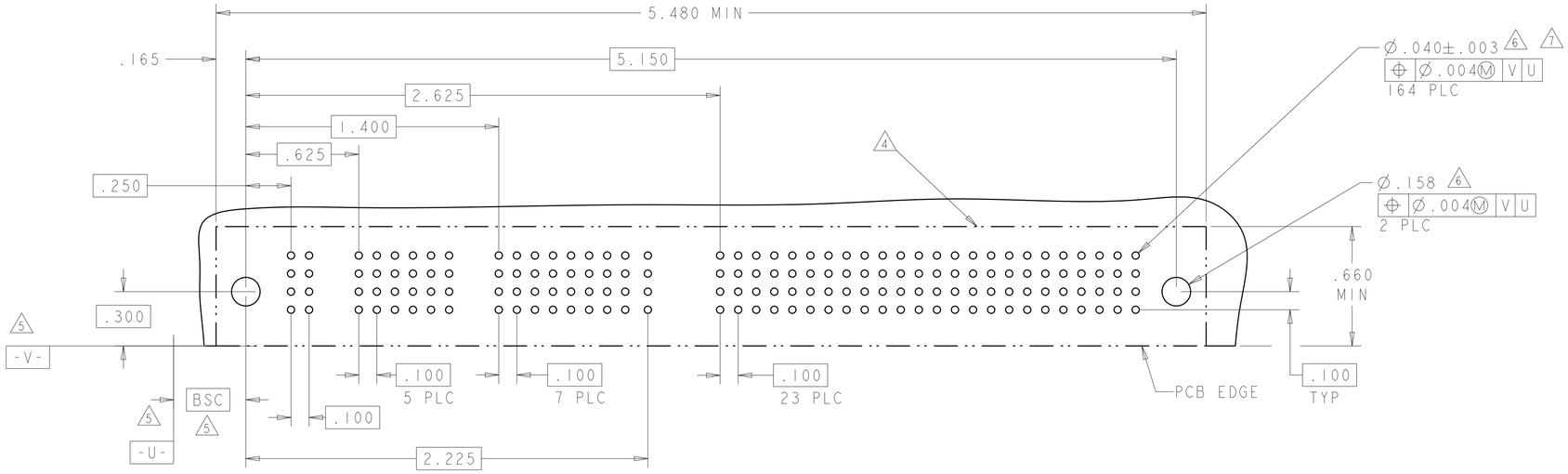

PART NUMBER	ROWS
1892222-1	D C B A
3ACP + 9P + 16S	

POWER: P1 P2 P3 P4 P5 P6 P7 P8 P9 P10 P11 P12 — TM

SIGNAL: 1 2 3 4

J K N S

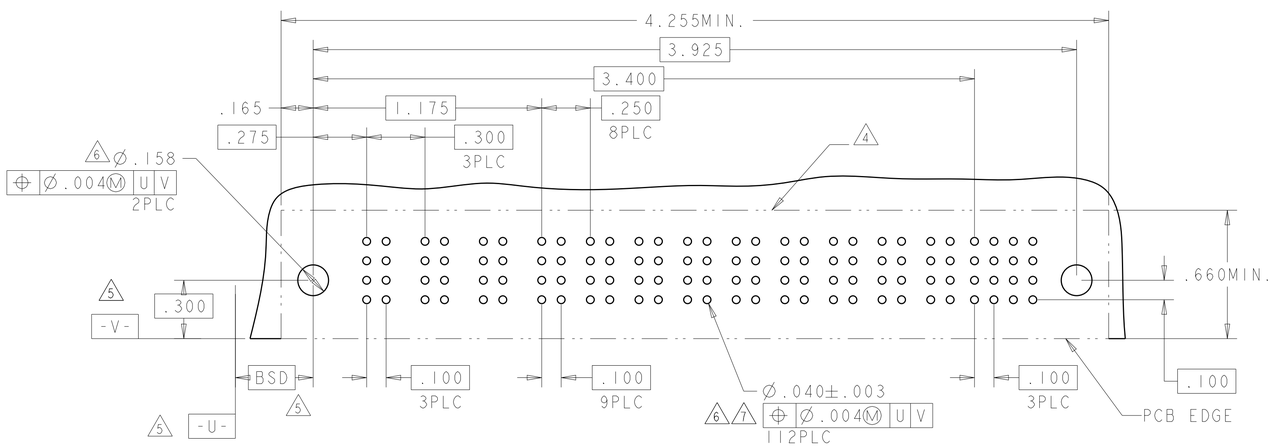

THIS DRAWING IS A CONTROLLED DOCUMENT FOR TYCO ELECTRONICS CORPORATION. IT IS SUBJECT TO CHANGE AND THE CONTROLLING ENGINEERING ORGANIZATION SHOULD BE CONTACTED FOR THE LATEST REVISION.

DWN	Alex Shoal	SEP01'06
CHK	Zhao Suny	SEP01'06
APVD	Steven Yao	SEP01'06

TE connectivity — Tyco Electronics, Shanghai R.P.C. 200233

DIMENSIONS: INCHES

TOLERANCES UNLESS OTHERWISE SPECIFIED:
0 PLC ±-
1 PLC ±-
2 PLC ±.01
3 PLC ±.005
4 PLC ±.0020
ANGLES ±2°

MATERIAL - -

FINISH - -

PRODUCT SPEC 108-1973

APPLICATION SPEC 114-13038

WEIGHT -

NAME: RIGHT ANGLE SOLDER HEADER ASSEMBLY MULTI-BEAM XL USING MBXLE CONTACTS

SIZE	CAGE CODE	DRAWING NO	RESTRICTED TO
A1	00779	C-1892222	-

CUSTOMER DRAWING | SCALE 4:1 | SHEET 3 OF 6 | REV A5

THIS DRAWING IS UNPUBLISHED. RELEASED FOR PUBLICATION 20
© COPYRIGHT 20 BY TYCO ELECTRONICS CORPORATION. ALL RIGHTS RESERVED.

LOC	DIST
ES	00

REVISIONS

P	LTR	DESCRIPTION	DATE	DWN	APVD
	-	SEE SHEET 1	-	-	-

PART NUMBER	ROWS	POWER P1	P2	P3	P4	P5	P6	P7	P8	P9	P10	P11	P12	SIGNAL 1	2	3	4
1892222-2	D			TM	TM	TM	TM	TM	TM	TM	TM	TM	TM	J	J	J	J
	C													K	K	K	K
	B													N	N	N	N
	A													S	S	S	H
3ACP + 9P + 16S																	

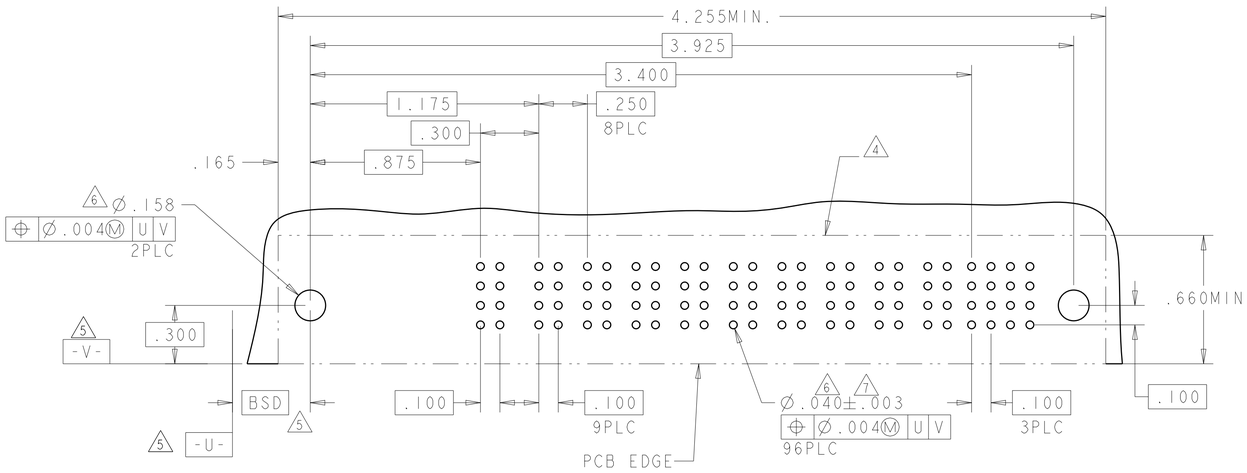

PART NUMBER	ROWS	POWER P1	P2	P3	P4	P5	P6	P7	P8	P9	P10	P11	P12	SIGNAL 1	2	3	4
1892222-3	D			TM			TM				TM		TM	J	J	J	J
	C													K	K	K	K
	B													N	N	N	N
	A													S	S	S	H
3ACP + 9P + 16S																	

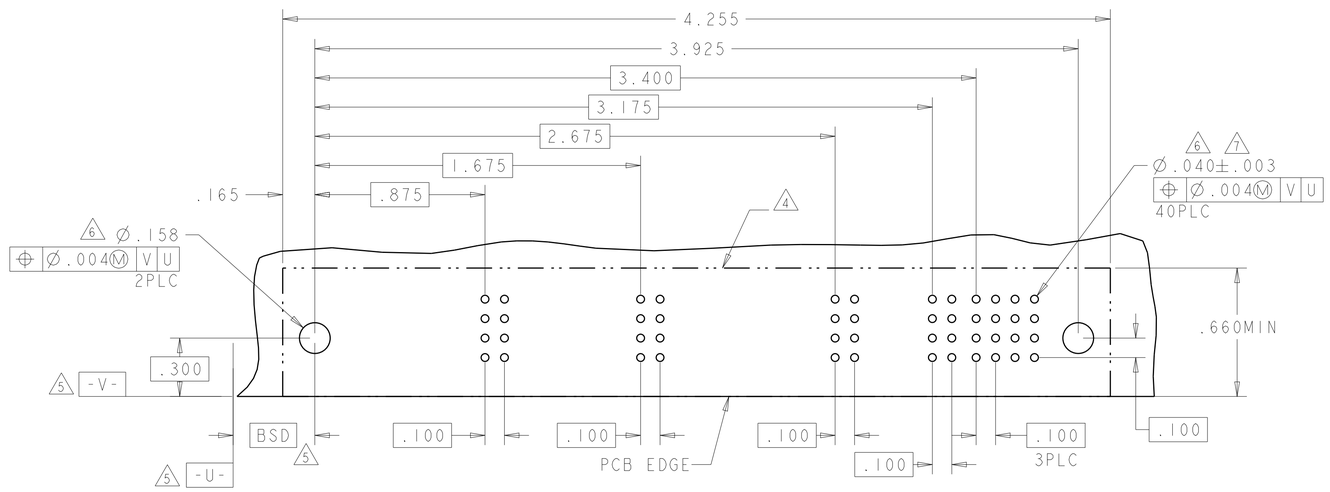

THIS DRAWING IS A CONTROLLED DOCUMENT FOR TYCO ELECTRONICS CORPORATION. IT IS SUBJECT TO CHANGE AND THE CONTROLLING ENGINEERING ORGANIZATION SHOULD BE CONTACTED FOR THE LATEST REVISION.

DWN	Alex Shoal	SEP01'06
CHK	Zhao Suny	SEP01'06
APVD	Steven Yao	SEP01'06

TE connectivity
Tyco Electronics
Shanghai R.P.C. 200233

DIMENSIONS: INCHES

TOLERANCES UNLESS OTHERWISE SPECIFIED:

0 PLC	± -
1 PLC	± -
2 PLC	± .01
3 PLC	± .005
4 PLC	± .0020
ANGLES	±2°

MATERIAL - -

FINISH - -

PRODUCT SPEC 108-1973

APPLICATION SPEC 114-13038

WEIGHT -

NAME RIGHT ANGLE SOLDER HEADER ASSEMBLY MULTI-BEAM XL USING MBXLE CONTACTS -

SIZE	CAGE CODE	DRAWING NO	RESTRICTED TO
A1	00779	C-1892222	-

CUSTOMER DRAWING

SCALE	SHEET	OF	REV
4:1	4	6	A5

THIS DRAWING IS UNPUBLISHED. RELEASED FOR PUBLICATION 20
© COPYRIGHT 20 BY TYCO ELECTRONICS CORPORATION. ALL RIGHTS RESERVED.

LOC	DIST
ES	00

REVISIONS

P	LTR	DESCRIPTION	DATE	DWN	APVD
	-	SEE SHEET 1	-	-	-

A4

PART NUMBER	ROWS	SIGNAL 1	2	3	4	5	6	7	8	9	POWER P1	P2	P3	P4	P5	P6	P7	P8	P9	P10	P11	P12	P13	P14	P15	P16	P17	P18	P19	P20	P21	P22	P23	P24
1892222-8	D	J	J	J	J				J	J	TM	TM	TM	TM	TM	TM	TM	TM	TM	TM		TM	TM	TM	TM	TM	TM	TM	TM	TM	TM		TM	TM
	C	K	K	K	K				K	K																								
	B	N	N	N	N				N	N																								
	A	S	S	S	S				S	S																								
36S + 24P																																		

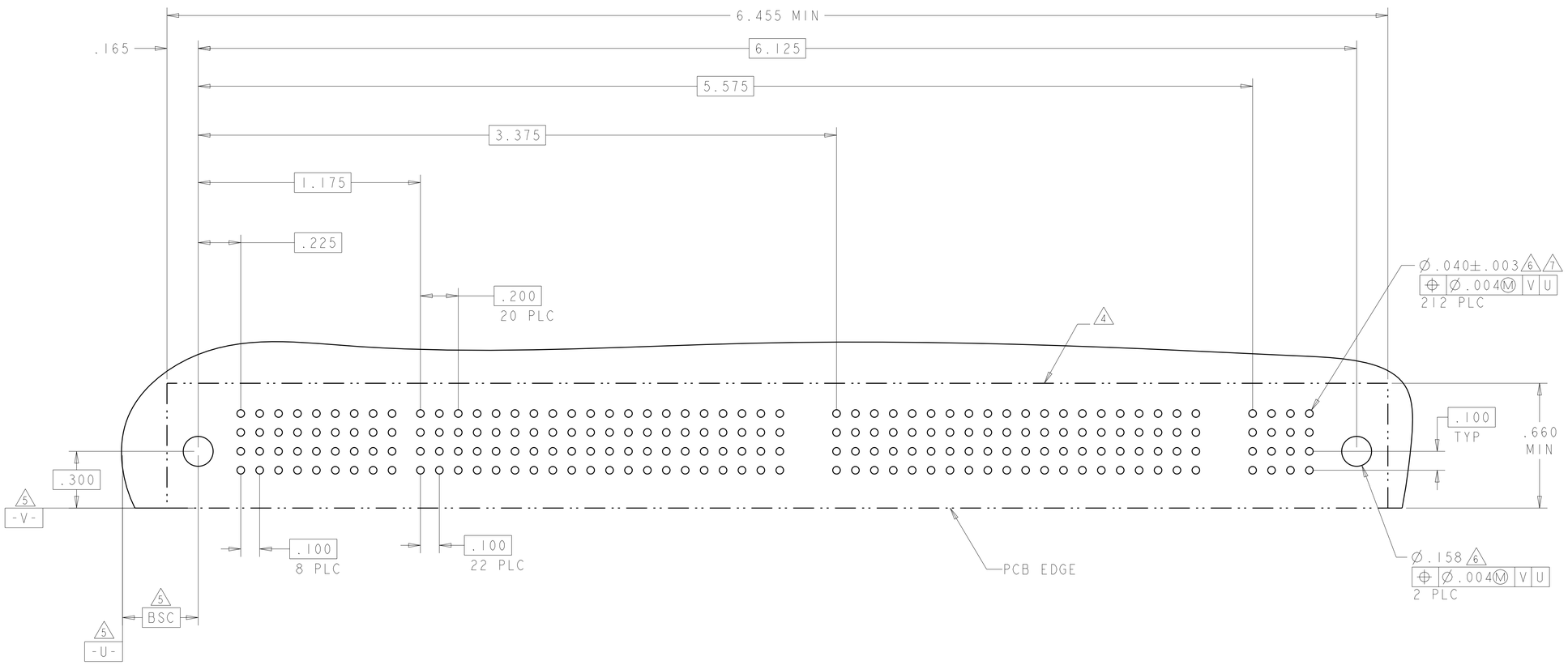

THIS DRAWING IS A CONTROLLED DOCUMENT FOR TYCO ELECTRONICS CORPORATION. IT IS SUBJECT TO CHANGE AND THE CONTROLLING ENGINEERING ORGANIZATION SHOULD BE CONTACTED FOR THE LATEST REVISION.

DIMENSIONS: INCHES

TOLERANCES UNLESS OTHERWISE SPECIFIED:
0 PLC ±-
1 PLC ±-
2 PLC ±.01
3 PLC ±.005
4 PLC ±.0020
ANGLES ±2°

MATERIAL - -
FINISH - -

DWN	Alex Shoal	SEP01'06
CHK	Zhao Suny	SEP01'06
APVD	Steven Yao	SEP01'06
PRODUCT SPEC	108-1973	
APPLICATION SPEC	114-13038	
WEIGHT	-	

TE connectivity
Tyco Electronics
Shanghai R.P.C. 200233

NAME
RIGHT ANGLE SOLDER HEADER ASSEMBLY
MULTI-BEAM XL USING MBXLE CONTACTS
-

SIZE	CAGE CODE	DRAWING NO	RESTRICTED TO
A1	00779	C-1892222	-

CUSTOMER DRAWING

SCALE	SHEET	OF	REV
4:1	5	6	A5

THIS DRAWING IS UNPUBLISHED. RELEASED FOR PUBLICATION 20
© COPYRIGHT 20 BY TYCO ELECTRONICS CORPORATION. ALL RIGHTS RESERVED.

LOC	DIST
ES	00

REVISIONS

P	LTR	DESCRIPTION	DATE	DWN	APVD
	-	SEE SHEET 1	-	-	-

A4

PART NUMBER	ROWS	POWER P1	P2	P3	P4	P5	P6	P7	P8	P9	SIGNAL 1	2	3	4	5	6	7	8	9	10	11	12	13	14	15	16	17	18	19	20	21	22	23
1892222-9	D	TM		TM	TM	TM		TM	TM	TM	J	J				J	J	J	J	J	J	J	J	J	J	J	J	J	J	J	J	J	J
	C										K	K				K	K	K	K	K	K	K	K	K	K	K	K	K	K	K	K	K	K
	B										N	N				N	N	N	N	N	N	N	N	N	N	N	N	N	N	N	N	N	N
	A										S	S				S	S	S	S	S	S	S	S	S	S	S	S	S	S	S	S	S	S
9P + 92S																																	

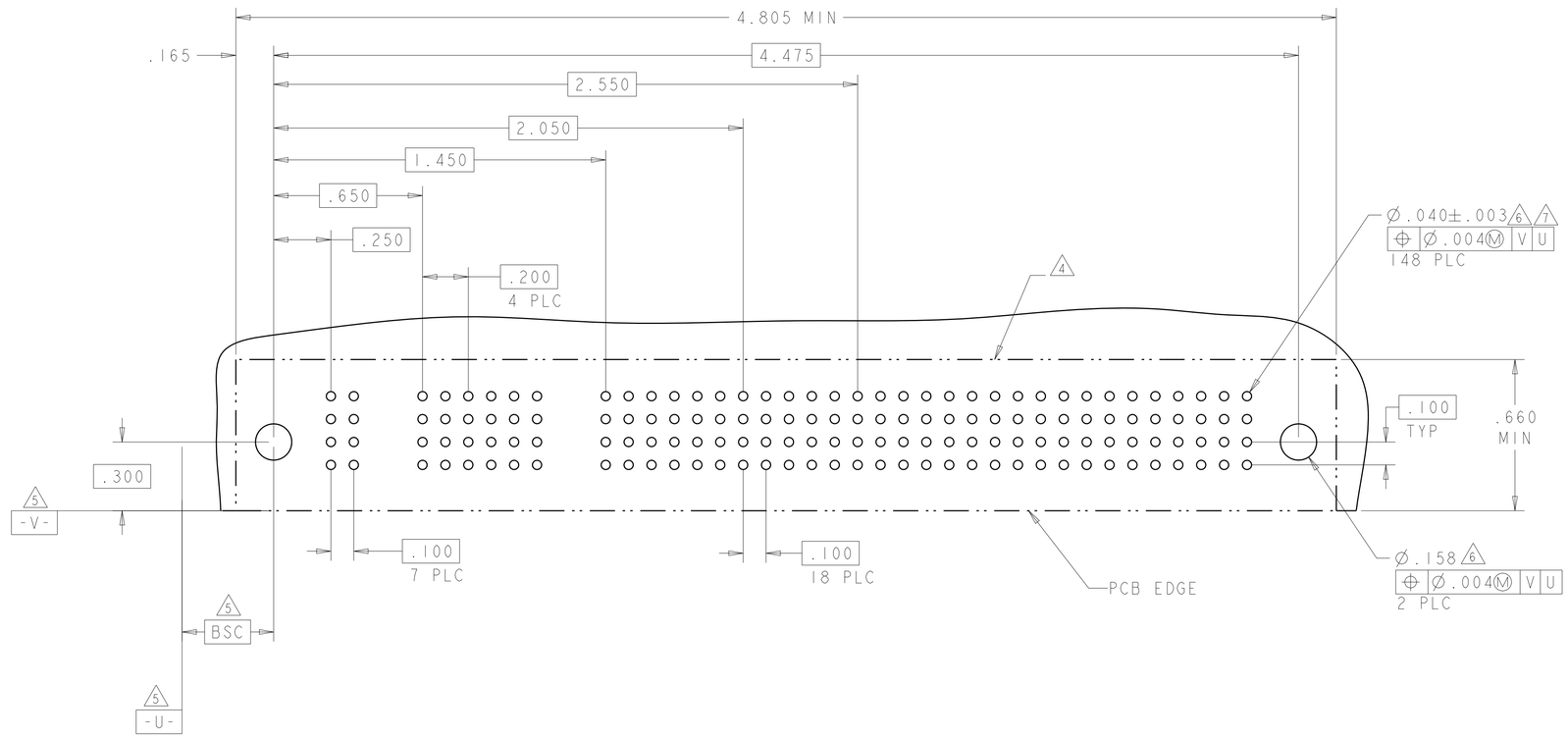

THIS DRAWING IS A CONTROLLED DOCUMENT FOR TYCO ELECTRONICS CORPORATION. IT IS SUBJECT TO CHANGE AND THE CONTROLLING ENGINEERING ORGANIZATION SHOULD BE CONTACTED FOR THE LATEST REVISION.

DIMENSIONS: INCHES

TOLERANCES UNLESS OTHERWISE SPECIFIED:
0 PLC ±-
1 PLC ±-
2 PLC ±.01
3 PLC ±.005
4 PLC ±.0020
ANGLES ±2°

MATERIAL - -
FINISH - -

DWN Alex Shoal SEP01'06
CHK Zhao Suny SEP01'06
APVD Steven Yao SEP01'06

PRODUCT SPEC 108-1973
APPLICATION SPEC 114-13038
WEIGHT -

Tyco Electronics
Shanghai R.P.C. 200233

NAME RIGHT ANGLE SOLDER HEADER ASSEMBLY MULTI-BEAM XL USING MBXLE CONTACTS
-

SIZE	CAGE CODE	DRAWING NO	RESTRICTED TO
A1	00779	C-1892222	-

CUSTOMER DRAWING | SCALE 4:1 | SHEET 6 OF 6 | REV A5