Chipsmall Limited consists of a professional team with an average of over 10 year of expertise in the distribution of electronic components. Based in Hongkong, we have already established firm and mutual-benefit business relationships with customers from,Europe,America and south Asia,supplying obsolete and hard-to-find components to meet their specific needs.

With the principle of “Quality Parts,Customers Priority,Honest Operation,and Considerate Service”,our business mainly focus on the distribution of electronic components. Line cards we deal with include Microchip,ALPS,ROHM,Xilinx,Pulse,ON,Everlight and Freescale. Main products comprise IC,Modules,Potentiometer,IC Socket,Relay,Connector.Our parts cover such applications as commercial,industrial, and automotives areas.

We are looking forward to setting up business relationship with you and hope to provide you with the best service and solution. Let us make a better world for our industry!

Contact us

Tel: +86-755-8981 8866 Fax: +86-755-8427 6832
Email & Skype: info@chipsmall.com Web: www.chipsmall.com
Address: A1208, Overseas Decoration Building, #122 Zhenhua RD., Futian, Shenzhen, China

THIS DRAWING IS UNPUBLISHED. RELEASED FOR PUBLICATION -,- .
© COPYRIGHT - BY TYCO ELECTRONICS CORPORATION. ALL INTERNATIONAL RIGHTS RESERVED.

LOC	DIST
J	—

REVISIONS 変更

P	LTR	DESCRIPTION	DATE	DWN	APVD
	B	REVISED	26AUG10	T.T	T.M

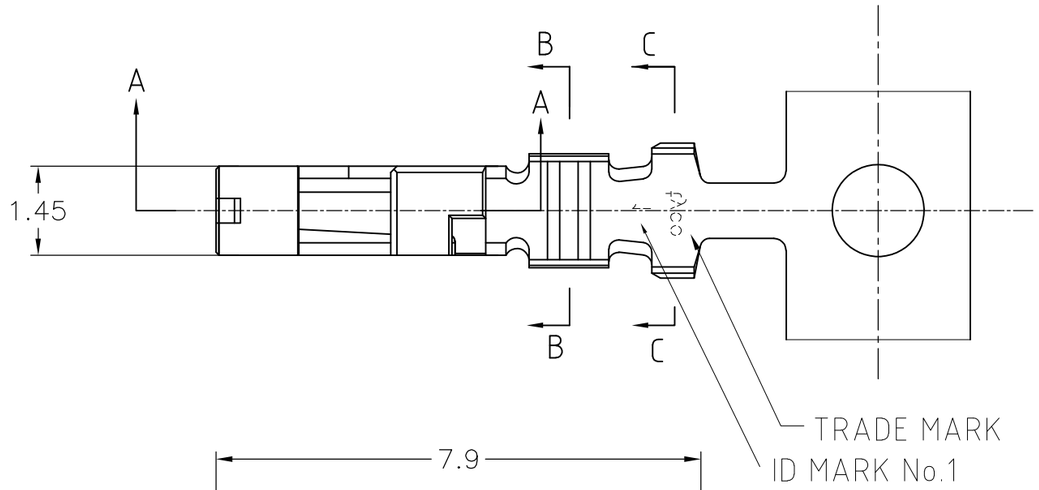

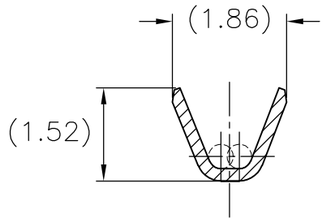

断面 B-B
SECT.

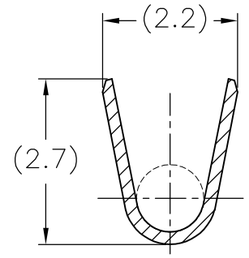

断面 C-C
SECT.

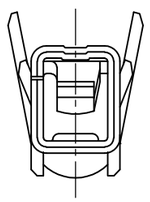

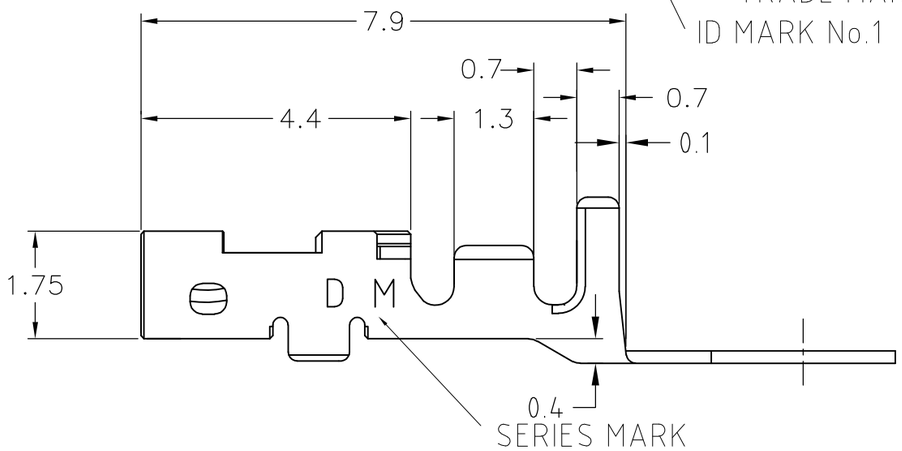

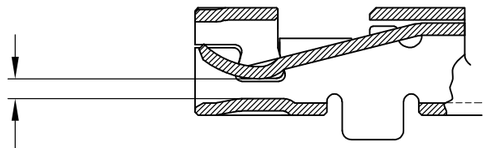

0.5tタブにかん合
MATE WITH 0.5t TAB

断面 A-A
SECT.

WIRE RANGE 導体断面積	INSULATION DIA 被覆外径	MATERIAL 材料	PART No. 型番
AWG#28～#22 0.08～0.38mm²	φ1.08~φ1.6	COPPER ALLOY,FINISH:CONTACT AREA Au 0.76μm MIN,OVER Ni 1.27μm MIN 材料：銅合金,下地：Niめっき1.27μm以上,接点部：金めっき0.76μm以上	1939991-2

THIS DRAWING IS A CONTROLLED DOCUMENT.

DIMENSIONS: 単位： 耗 mm

TOLERANCES UNLESS OTHERWISE SPECIFIED: 一般公差

0 PLC	± 0.3
1 PLC	±
2 PLC	±
3 PLC	±
4 PLC	±
ANGLES	± 3deg

MATERIAL 材料 —

FINISH 仕上 —

DWN	M.MAEBASHI	25APR2007
CHK	T.KUDO	25APR2007
APVD	D.MITSUGI	25APR2007
PRODUCT SPEC 製品規格	108-78414	
APPLICATION SPEC 取付適用規格	114-5405	
WEIGHT	—	

Tyco Electronics — Tyco Electronics Corporation, Kawasaki, Japan

NAME 名称: DYNAMIC D1000 SERIES REC CONTACT M TYPE REEL

SIZE	CAGE CODE	DRAWING NO 番号	RESTRICTED TO
A3	00779	C-1939991	—

CUSTOMER DRAWING

SCALE 尺度	SHEET	REV
10:1	1 OF 1	B