Chipsmall Limited consists of a professional team with an average of over 10 year of expertise in the distribution of electronic components. Based in Hongkong, we have already established firm and mutual-benefit business relationships with customers from,Europe,America and south Asia,supplying obsolete and hard-to-find components to meet their specific needs.

With the principle of “Quality Parts,Customers Priority,Honest Operation,and Considerate Service”,our business mainly focus on the distribution of electronic components. Line cards we deal with include Microchip,ALPS,ROHM,Xilinx,Pulse,ON,Everlight and Freescale. Main products comprise IC,Modules,Potentiometer,IC Socket,Relay,Connector.Our parts cover such applications as commercial,industrial, and automotives areas.

We are looking forward to setting up business relationship with you and hope to provide you with the best service and solution. Let us make a better world for our industry!

Contact us

Tel: +86-755-8981 8866 Fax: +86-755-8427 6832
Email & Skype: info@chipsmall.com Web: www.chipsmall.com
Address: A1208, Overseas Decoration Building, #122 Zhenhua RD., Futian, Shenzhen, China

THIS DRAWING IS UNPUBLISHED. RELEASED FOR PUBLICATION 20
© COPYRIGHT 20 BY - ALL RIGHTS RESERVED.

LOC	DIST
-	-

REVISIONS

P	LTR	DESCRIPTION	DATE	DWN	APVD
	B	PER ECR-11-017710	28MAR2012	PB	PB
	C	ECR-13-004256	11MAR2013	TB	DM

1969343-1,-2,-3,-4,-5,-6

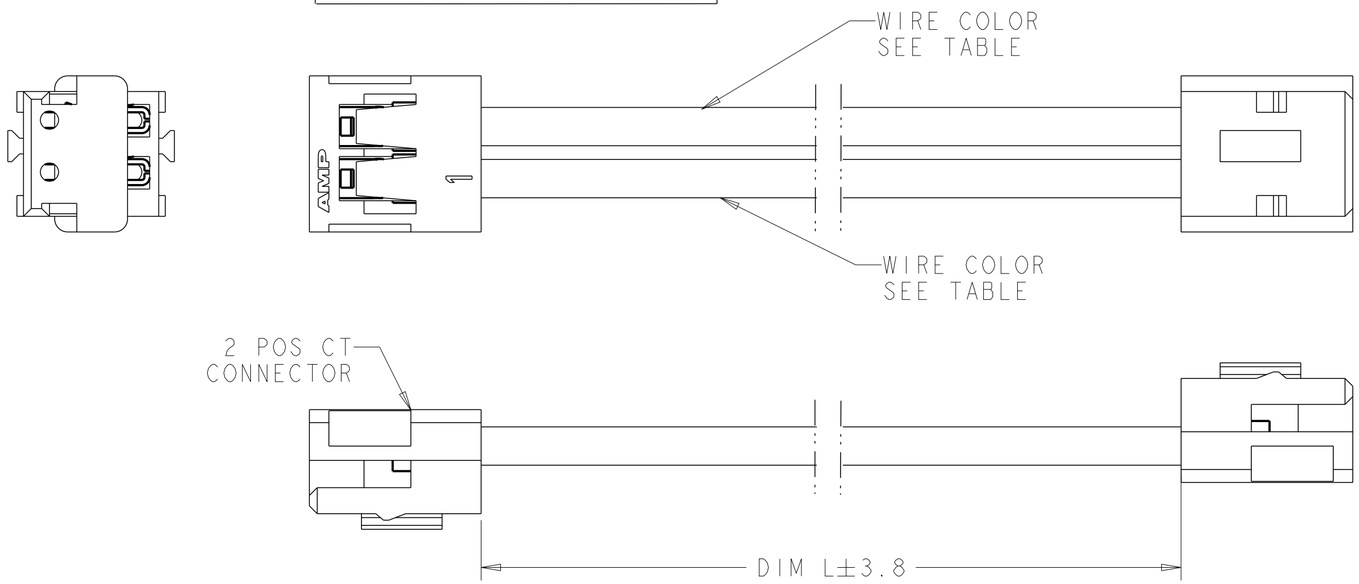

1969343-7

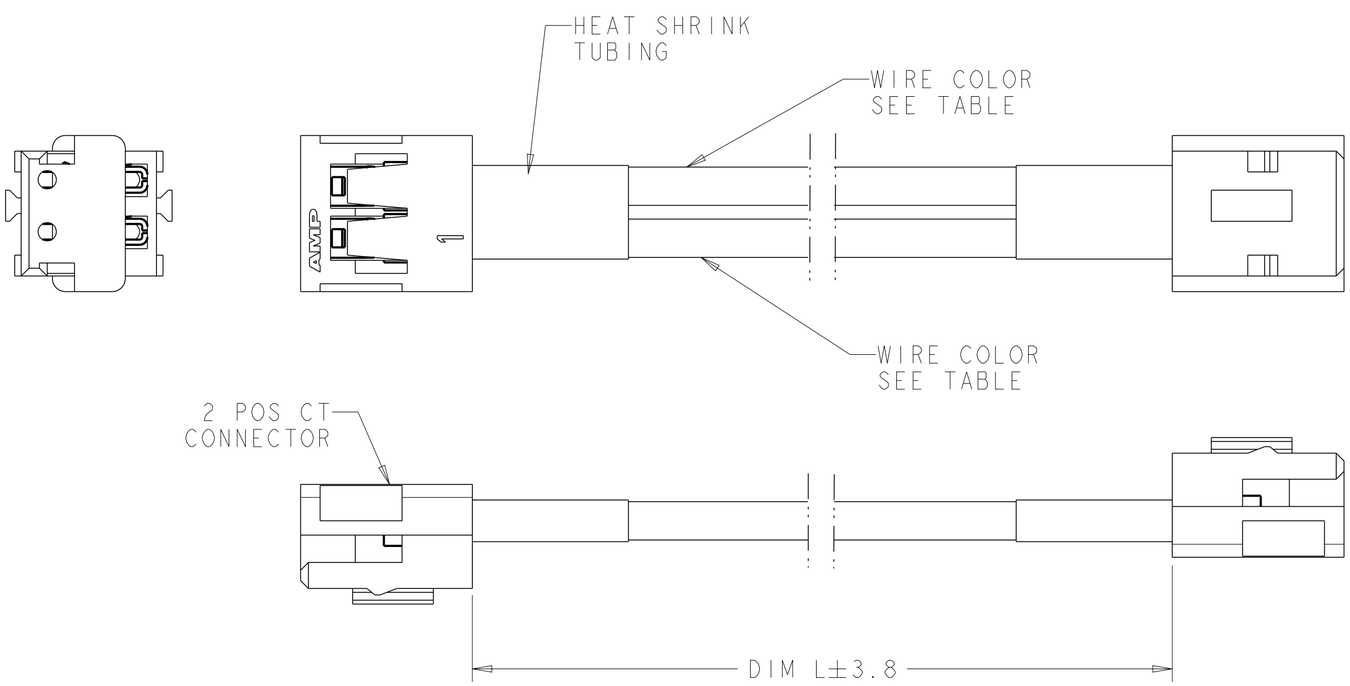

1 MATERIALS AND FINISH:
HOUSING: NYLON, COLOR: BLACK
CONTACTS: COPPER ALLOY, FINISH: Ag OVER Sn
WIRE: 24 AWG, UL 1007

2. MUST COMPLY WITH DIRECTIVE 2002/95/EC (ROHS)

3 PRELIMINARY - NOT FOR PRODUCTION

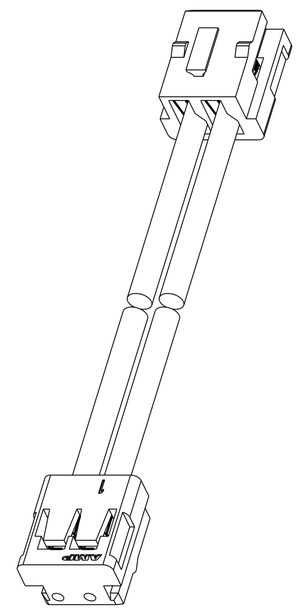

1969343-1,-2,-3,-4,-5,-6
SCALE 4:1

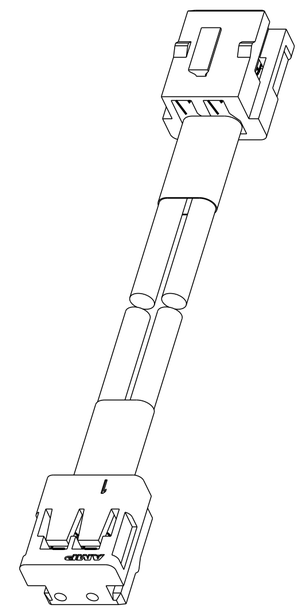

1969343-7
SCALE 4:1

WIRE COLOR POSITION #2	WIRE COLOR POSITION #1	DIM L	PART NO.
WHITE	WHITE	150.0	1969343-7
WHITE	WHITE	300.0	1969343-6
WHITE	WHITE	150.0	1969343-5
WHITE	WHITE	50.0	1969343-4
BLACK	RED	300.0	3 1969343-3
BLACK	RED	150.0	3 1969343-2
BLACK	RED	50.0	3 1969343-1

THIS DRAWING IS A CONTROLLED DOCUMENT.

DIMENSIONS: mm

TOLERANCES UNLESS OTHERWISE SPECIFIED:
0 PLC ±-
1 PLC ±-
2 PLC ±-
3 PLC ±-
4 PLC ±-
ANGLES ±-

MATERIAL 1 -
FINISH 1 -

DWN JR RUTH 10DEC09
CHK D DECKER 10DEC09
APVD D DECKER 10DEC09
PRODUCT SPEC -
APPLICATION SPEC -
WEIGHT -

TE Connectivity

NAME CABLE ASSEMBLY
CT, 2 POSITION
-

SIZE	CAGE CODE	DRAWING NO	RESTRICTED TO
A2	00779	C-1969343	-

CUSTOMER DRAWING | SCALE NTS | SHEET 1 OF 1 | REV C

1471-9 (3/11)