Chipsmall Limited consists of a professional team with an average of over 10 year of expertise in the distribution of electronic components. Based in Hongkong, we have already established firm and mutual-benefit business relationships with customers from,Europe,America and south Asia,supplying obsolete and hard-to-find components to meet their specific needs.

With the principle of “Quality Parts,Customers Priority,Honest Operation,and Considerate Service”,our business mainly focus on the distribution of electronic components. Line cards we deal with include Microchip,ALPS,ROHM,Xilinx,Pulse,ON,Everlight and Freescale. Main products comprise IC,Modules,Potentiometer,IC Socket,Relay,Connector.Our parts cover such applications as commercial,industrial, and automotives areas.

We are looking forward to setting up business relationship with you and hope to provide you with the best service and solution. Let us make a better world for our industry!

# Contact us

Tel: +86-755-8981 8866 Fax: +86-755-8427 6832
Email & Skype: info@chipsmall.com Web: www.chipsmall.com
Address: A1208, Overseas Decoration Building, #122 Zhenhua RD., Futian, Shenzhen, China

THIS DRAWING IS UNPUBLISHED. RELEASED FOR PUBLICATION 20
© COPYRIGHT 20 TE CONNECTIVITY ALL RIGHTS RESERVED.

| LOC | DIST |
|---|---|
| - | - |

REVISIONS

| P | LTR | DESCRIPTION | DATE | DWN | APVD |
|---|---|---|---|---|---|
| | A2 | ECR-13-013865 | 04SEP2013 | LW | PY |
| | A3 | ECR-14-015468 | 20OCT2014 | LW | PY |
| | A4 | ECR-15-005723 | 13APR2015 | KR | TD |
| | B | ECR-17-009698 | 29AUG2017 | SG | MS |

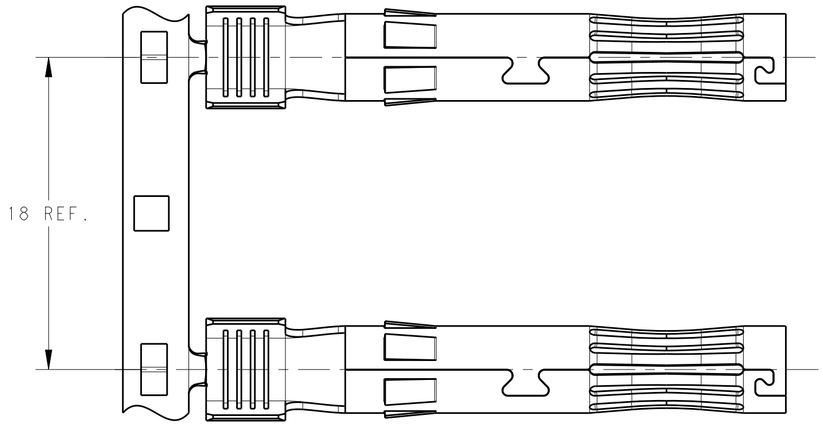


STRIP
-2 AS SHOWN

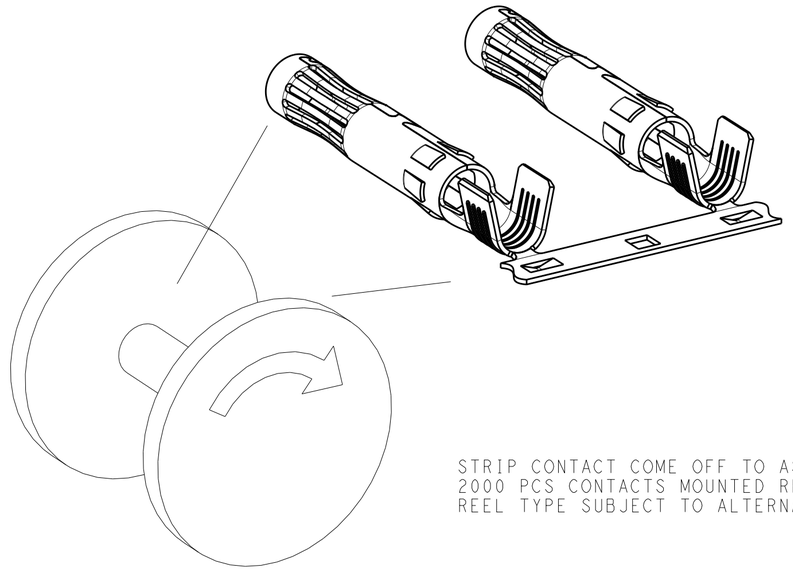

STRIP CONTACT COME OFF TO ASSEMBLY
2000 PCS CONTACTS MOUNTED REEL
REEL TYPE SUBJECT TO ALTERNATION

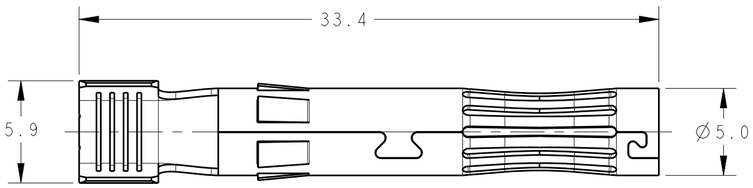


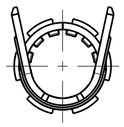

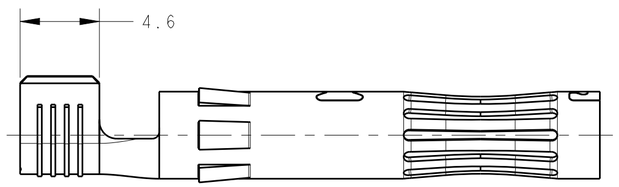


LOOSE PIECE
-3 AS SHOWN

1. MATERIAL: COPPER ALLOY, TIN PLATED
2. USED FOR SOLAR CABLE: 4mm2/12AWG, 6mm2/10AWG.
3. PLS DON'T TOUCH THE CONTACT DIRECTLY BY HAND WITHOUT ANY PROTECTION.

4 USE ONLY CRIMPING TOOL OF TE CONNECTIVITY TO CRIMP CONTACT. CRIMPING TOOL PN 6-1579014-8 WILL BE USED FOR CRIMPING THE CONTACTS HAVING WIRE SIZE 4.0mm²+6.0mm².

| | | |
|---|---|---|
| LOOSE PIECE | 1971858-6 | 1 |
| | 1971858-5 | 10 |
| | 1971858-4 | 100 |
| | 1971858-3 | 1000 |
| STRIP | 1971858-2 | 2000 |
| CONTACT TYPE | PART NUMBER | PACKING UNIT |
| | FOR ORDER | |

THIS DRAWING IS A CONTROLLED DOCUMENT.

DIMENSIONS: mm

TOLERANCES UNLESS OTHERWISE SPECIFIED:
0 PLC ±0.5
1 PLC ±0.3
2 PLC ±-
3 PLC ±-
4 PLC ±-
ANGLES ±-

MATERIAL: COPPER ALLOY
FINISH: TIN

DWN CHRIS WANG 09AUG2012
CHK TANDY TANG 09AUG2012
APVD PETER YIN 09AUG2012
PRODUCT SPEC 108-106078
APPLICATION SPEC 114-106078
WEIGHT -

TE Connectivity

NAME: SOCKET CONTACT SOLARLOK PV4 CONNECTOR -

| SIZE | CAGE CODE | DRAWING NO | RESTRICTED TO |
|---|---|---|---|
| A2 | 00779 | C-1971858 | - |

Customer Drawing | SCALE 4:1 | SHEET 1 OF 1 | REV B

1471-9 (3/11)