Chipsmall Limited consists of a professional team with an average of over 10 year of expertise in the distribution of electronic components. Based in Hongkong, we have already established firm and mutual-benefit business relationships with customers from,Europe,America and south Asia,supplying obsolete and hard-to-find components to meet their specific needs.

With the principle of “Quality Parts,Customers Priority,Honest Operation,and Considerate Service”,our business mainly focus on the distribution of electronic components. Line cards we deal with include Microchip,ALPS,ROHM,Xilinx,Pulse,ON,Everlight and Freescale. Main products comprise IC,Modules,Potentiometer,IC Socket,Relay,Connector.Our parts cover such applications as commercial,industrial, and automotives areas.

We are looking forward to setting up business relationship with you and hope to provide you with the best service and solution. Let us make a better world for our industry!

Contact us

Tel: +86-755-8981 8866 Fax: +86-755-8427 6832
Email & Skype: info@chipsmall.com Web: www.chipsmall.com
Address: A1208, Overseas Decoration Building, #122 Zhenhua RD., Futian, Shenzhen, China

3M™ RIGHT ANGLE SOCKET AND POWER MALE MODULE FOR MicroTCA APPLICATIONS

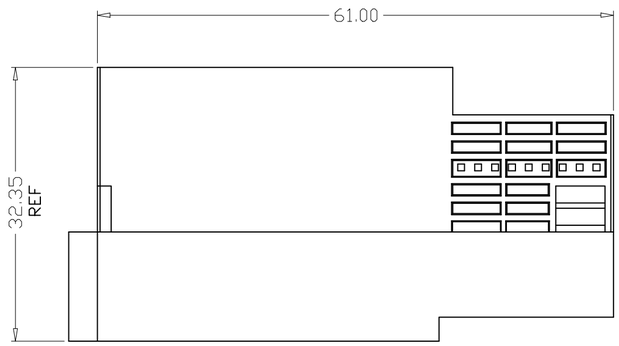

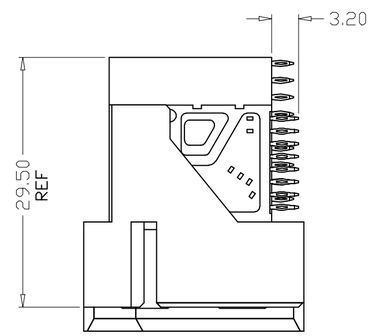

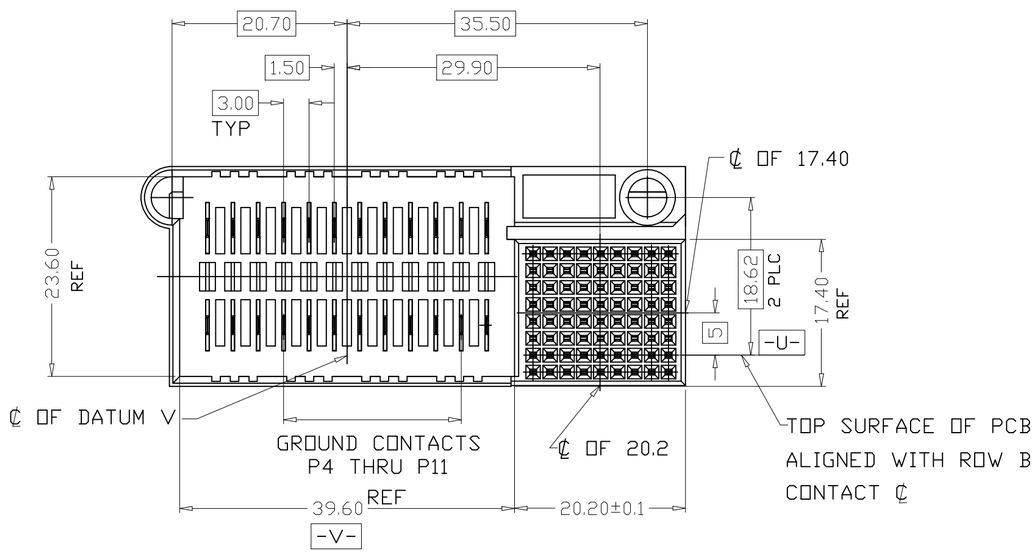

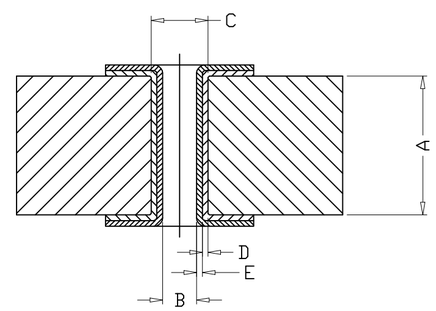

PLATED THROUGH-HOLE CROSS SECTION (NOT TO SCALE)

7

	HOLE PLATING TABLE	Dimension
A	PCB Thickness	Min. 1.4mm
B	Plated Through Hole Dia.	0.60 +/- 0.05mm
C	Drill Hole Diameter	0.70 +/- 0.02mm
D	Cu Thickness	Min. 25µm
E	Plating Thickness	Min. 0.5µm Immersion Sn

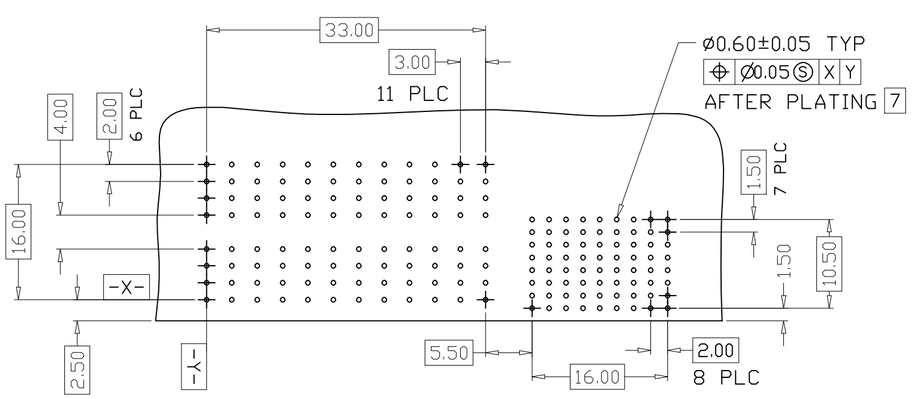

RECOMMENDED PC BOARD REQUIREMENTS

NOTES:

1. MATERIALS
   A. HOUSING: THERMOPLASTIC POLYESTER, GLASS FILLED RATED UL 94V-0, COLOR: GRAY
   B. CONTACT: COPPER ALLOY, GOLD PLATING
2. PLATING:
   -AS:
   FINISH: MATING AREA- 0.76um Au
   COMPLIANT PIN AREA-1.27um MIN MATTE Sn
   1.27um MIN Ni ALL OVER
3. RATINGS:
   A. VOLTAGE(TEST VOLTAGE): 80V r.m.s.
   B. CURRENT RATING:
   SIGNAL AND SIGNAL GND CONDUCTOR 0.625A/PIN
   POWER BRANCH GND CONDUCTOR 11.625 A/PIN
   C. MAXIMUM LINE RESISTANCES:
   SIGNAL AND SIGNAL GND CONDUCTOR 25 MILLI OHMS
   POWER BRANCH GND CONDUCTOR 5 MILLI OHMS
4. ENGAGING FORCE: 145N MAX;
   SEPARATING FORCE: 110N MAX.
5. DURABILITY: 200 MATING CYCLES
6. FOR PRODUCT SPECIFICATION AND WARRANTY INFORMATION SEE 78-5102-0084-9
7. PCB HOLE DIMENSIONS
8. SEE THE REGULATORY INFORMATION APPENDIX (RIA) IN THE "RoHS COMPLIANCE" SECTION OF: WWW.3MCONNECTOR.COM FOR COMPLIANCE INFORMATION (RIA E1 & C1 APPLY).
9. REFERENCE DOCUMENT 78-9101-3345-9
10. IN THE EVENT OF CONFLICT BETWEEN THIS DATA AND THAT CONTAINED IN THE PRODUCT SPEC., THE PRODUCT SPEC. TAKES PRECEDENT.
11. PART NUMBER: 1P01-1110-AS
12. FOR MATING PRODUCT USE:
    1P02-11X0-XX MicroTCA BACKPLANE HEADER AND POWER FEMALE MODULE

REV	ECO	ISSUE DATE AND DESCRIPTION	DRFT	CHKD
B	33179	REMOVED-HM PLATING AND 2.25mm CONTACT OPTIONS	ML	TS

DESIGN REFERENCE | NEXT ASSEMBLY | DISTRIBUTION CODES

DRFT ML DATE 10/05/10 | MFG | DATE
CHKD TS DATE 10/05/10 | APPVL | DATE

DIVISION | DIVISION CODE

DO NOT SCALE DRAWING | SCALE ——

TOLERANCES EXCEPT AS NOTED
INCHES: .0 ± * ; .00 ± * ; .000 ± * ; .0000 ± *
MILLIMETERS: 0 ± * ; .0 ± 0.3 ; .00 ± 0.20 ; .000 ± 0.100
ANGLES ± 1°

THIRD ANGLE PROJECTION

INTERPRET PER ASME Y14.5 – 1994

MAX SURFACE ROUGHNESS ☐ ALL SURFACES ☐ MARCH ONLY

3M Center St. Paul, MN 55144

© 3M COPYRIGHT
This document is the copyrighted property of the 3M Company and may not be reproduced without 3M written permission or used for other than 3M authorized purposes.

TITLE
1P01-1110-AS MicroTCA RIGHT ANGLE SOCKET AND POWER MALE MODULE

CAGE NUMBER | SIZE C | DRAWING NO. 78-5100-2367-0 | REV. B

MODEL | DET. LISTS ☐ YES ☐ NO | SHT 1 OF 1