Chipsmall Limited consists of a professional team with an average of over 10 year of expertise in the distribution of electronic components. Based in Hongkong, we have already established firm and mutual-benefit business relationships with customers from,Europe,America and south Asia,supplying obsolete and hard-to-find components to meet their specific needs.

With the principle of “Quality Parts,Customers Priority,Honest Operation,and Considerate Service”,our business mainly focus on the distribution of electronic components. Line cards we deal with include Microchip,ALPS,ROHM,Xilinx,Pulse,ON,Everlight and Freescale. Main products comprise IC,Modules,Potentiometer,IC Socket,Relay,Connector.Our parts cover such applications as commercial,industrial, and automotives areas.

We are looking forward to setting up business relationship with you and hope to provide you with the best service and solution. Let us make a better world for our industry!

Contact us

Tel: +86-755-8981 8866 Fax: +86-755-8427 6832
Email & Skype: info@chipsmall.com Web: www.chipsmall.com
Address: A1208, Overseas Decoration Building, #122 Zhenhua RD., Futian, Shenzhen, China

DRAWING MADE IN AMERICAN PROJECTION

LTR	REVISION RECORD	DATE	DWN	APVD
J	REVISED PER ECO-15-005333	08JUL2015	AP	RP

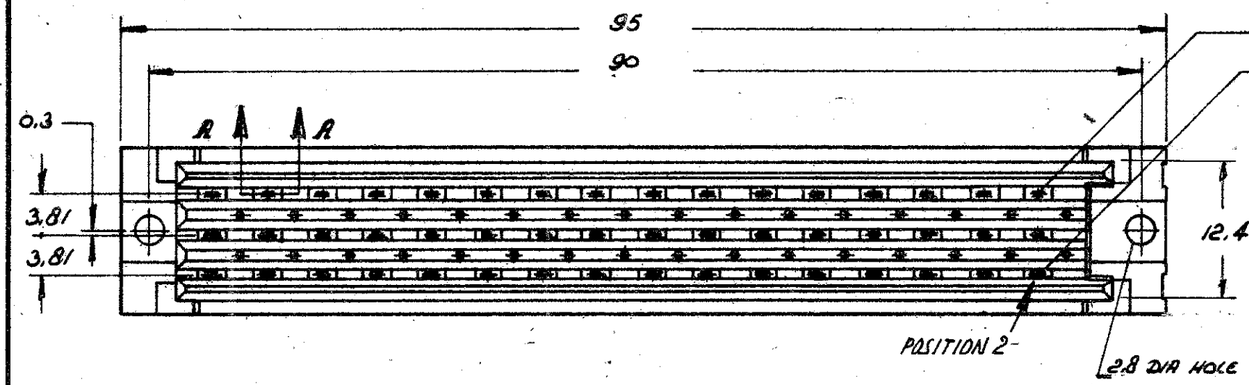

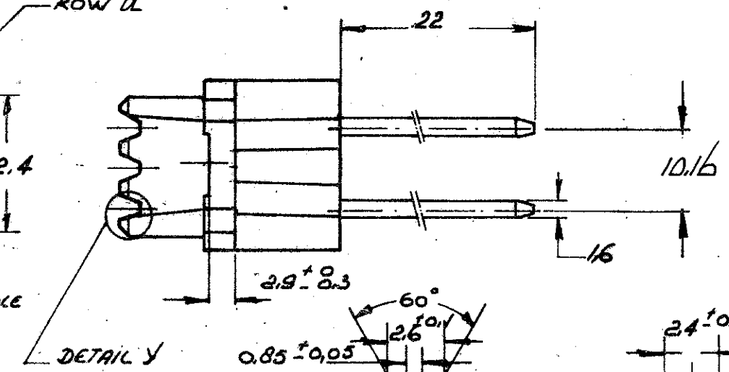

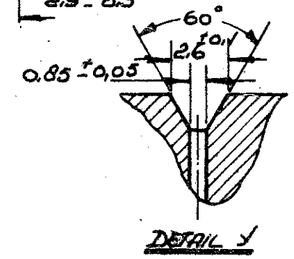

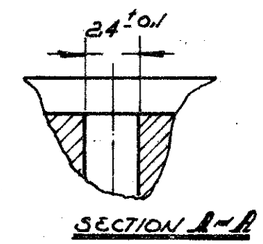

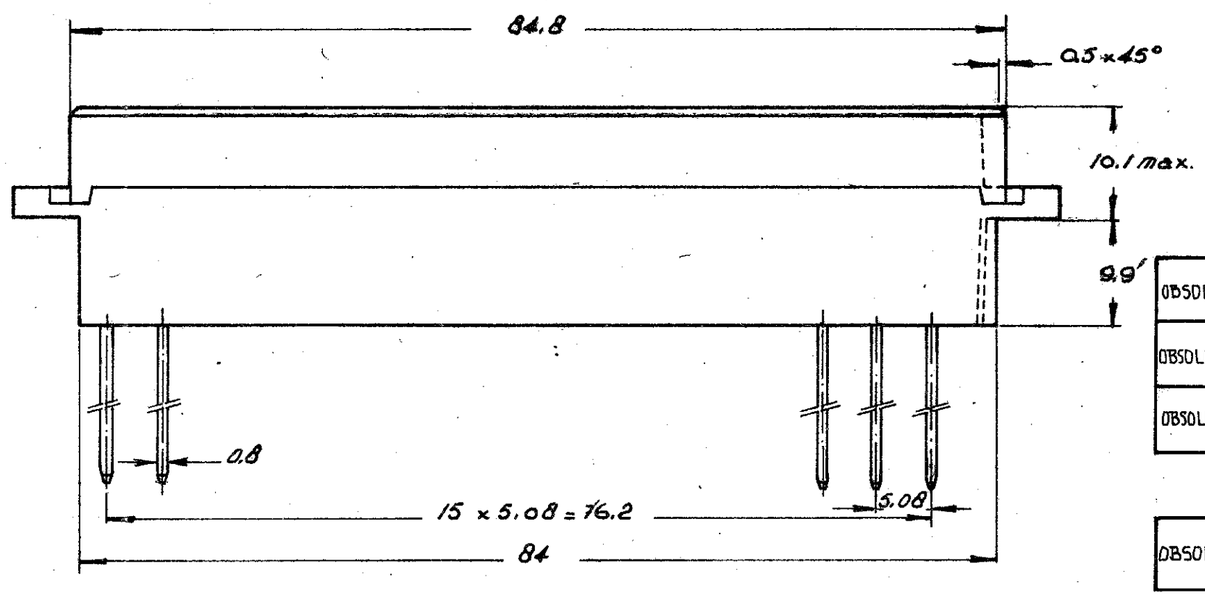

AN ASTERISK X DENOTES A CONTACT.

CONTACT NO.		2	4	6	8	10	12	14	16	18	20	22	24	26	28	30	32
ROW	Z	X	X	X	X	X	X	X	X	X	X	X	X	X	X	X	X
	b	.	.	.	.	.	.	.	.	.	.	.	.	.	.	.	.
	d	X	X	X	X	X	X	X	X	X	X	X	X	X	X	X	X

OBSOLETE	2-164430-8	HOUSING: GLASSFILLED POLYCARBONATE (GREY) CONTACTS: PHOSPHORBRONZE.	AT CONTACT AREA: EIC 60603-2 PERFORMANCE LEVEL III OVER NICKEL. AT POST AREA: GOLD FLASH OVER NICKEL
OBSOLETE	2-164430-7		AT CONTACT AREA: 2.0 µm AU OVER 1.25 µm Ni. AT POST AREA: GOLD FLASH OVER 1.25 µm Ni.
OBSOLETE	2-164430-6		AT CONTACT AREA: 3.75 µm AU OVER 1.25 µm Ni. AT POST AREA: GOLD FLASH OVER 1.25 µm Ni.
	2-164430-4		AT CONTACT AREA: EIC 60603-2 PERFORMANCE LEVEL II OVER NICKEL. AT POST AREA: GOLD FLASH OVER NICKEL.
OBSOLETE	2-164430-1		AT CONTACT AREA: EIC 60603-2 PERFORMANCE LEVEL I OVER NICKEL. AT POST AREA: GOLD FLASH OVER NICKEL.
	ORDER NO.	MATERIAL	PLATING

DRAWING NUMBER C-164430

CUSTOMER COPY FOR REFERENCE ONLY

DR M.U.GRUNSUEN DATE 7-12-82

CHK J.GIBBELS DATE 9 JULY 1997

DE DATE

APP DATE

© 1982 BY AMP-HOLLAND N.V. ALL RIGHTS RESERVED A-MP PRODUCTS COVERED BY PATENTS AND/OR PATENTS PENDING.

TE Connectivity

WIRE-RANGE	INSUL-RANGE	FIRST USED

SCALE	SIZE	NO	REV
	B	C-164430	J

NAME 32 POS. FEMALE RC. CONN. ACC. TO DIN 41612, WITH STANDARD TERMI POINT POSTS

DIMENSIONS IN M.M. DO NOT SCALE PRINT