Chipsmall Limited consists of a professional team with an average of over 10 year of expertise in the distribution of electronic components. Based in Hongkong, we have already established firm and mutual-benefit business relationships with customers from,Europe,America and south Asia,supplying obsolete and hard-to-find components to meet their specific needs.

With the principle of “Quality Parts,Customers Priority,Honest Operation,and Considerate Service”,our business mainly focus on the distribution of electronic components. Line cards we deal with include Microchip,ALPS,ROHM,Xilinx,Pulse,ON,Everlight and Freescale. Main products comprise IC,Modules,Potentiometer,IC Socket,Relay,Connector.Our parts cover such applications as commercial,industrial, and automotives areas.

We are looking forward to setting up business relationship with you and hope to provide you with the best service and solution. Let us make a better world for our industry!

Contact us

Tel: +86-755-8981 8866 Fax: +86-755-8427 6832
Email & Skype: info@chipsmall.com Web: www.chipsmall.com
Address: A1208, Overseas Decoration Building, #122 Zhenhua RD., Futian, Shenzhen, China

THIS DRAWING IS UNPUBLISHED. RELEASED FOR PUBLICATION , .SEP 2004
© COPYRIGHT 2004 By – ALL RIGHTS RESERVED.

REVISIONS

P	LTR	DESCRIPTION	DATE	DWN	APVD
	R	REVISED PER ECO-17-008763	23JAN2018	RG	SH

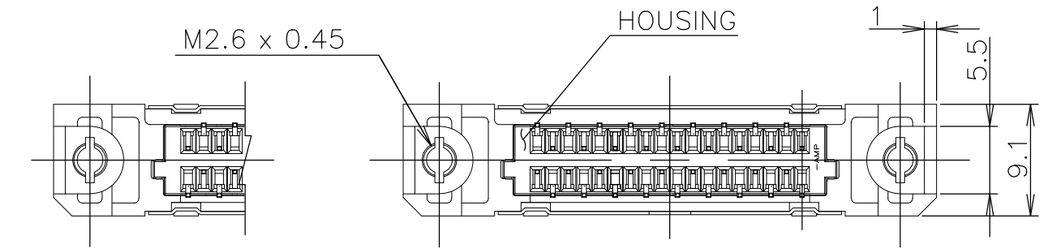

14,26,50 POSN

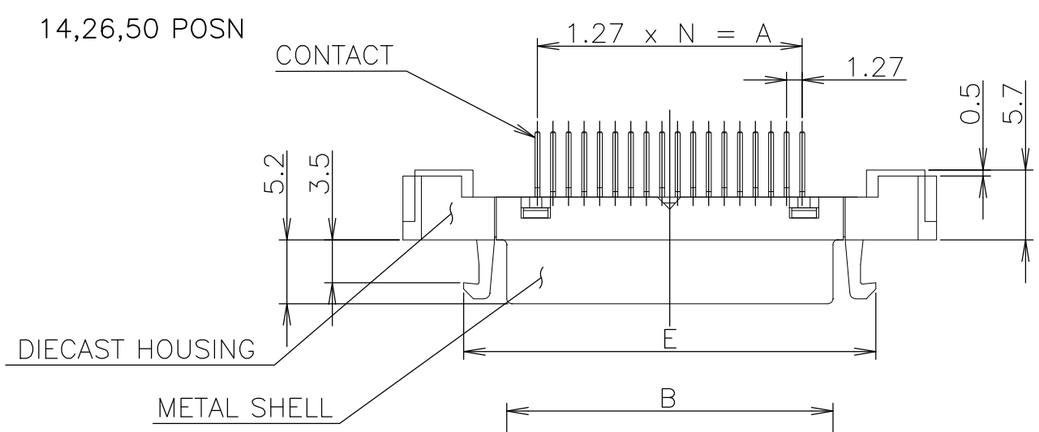

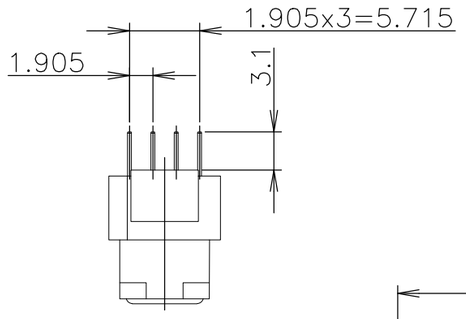

1 USED SCREW SIZE; M2.6 PANHEAD SCREW.
2 CONNECTOR TO BE MATED; 175677,5175751
3 MATERIAL AND FINISH;
* CONTACT; PHOS-BRONZE
FINISH: Au PLATING OVER Ni UNDER PLATING ON CONTACT AREA.
TIN PLATING OVER Ni UNDER PLATING ON SOLDER TINE AREA.
* METAL SHELL: STEEL
FINISH: Ni PLATING OVER COPPER UNDER PLATING.
* DIECAST HOUSING; ZINC
FINISH:Ni PLATING OVER COPPER UNDER PLATING.
* HOUSING; THERMOPLASTIC,UL94V-0,BLACK
4 RECOMMEND P.W.B THICKNESS; 1.6mm

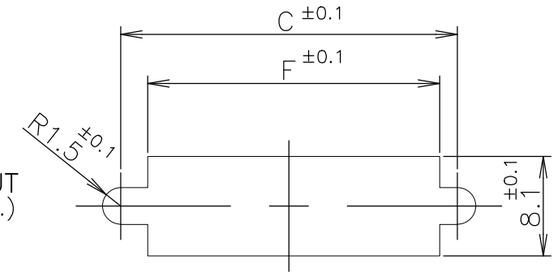

PANEL CUTOUT
(THK; 2mm MAX.)
FIG-2

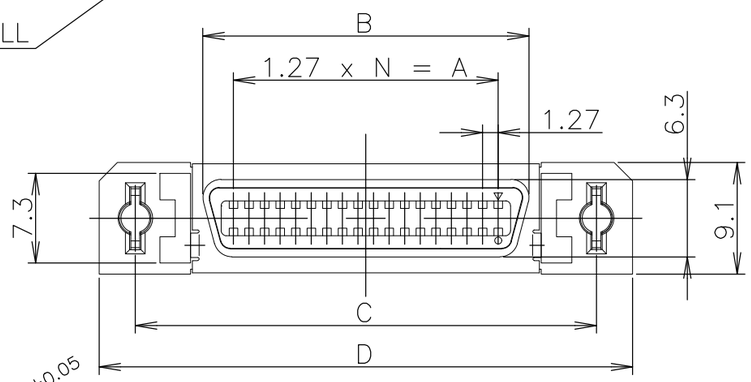

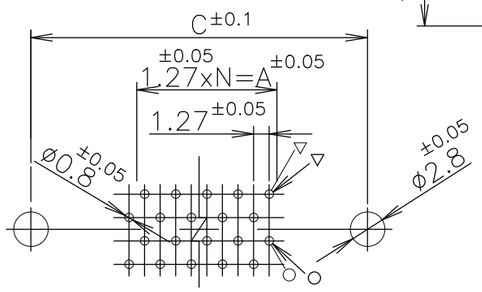

(APPLIED 20,36,68,80,100POSN)

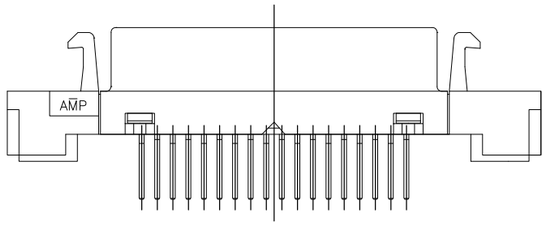

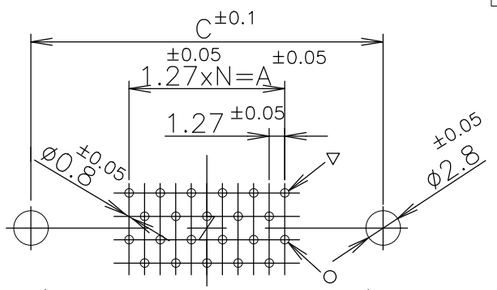

(APPLIED 14,26,50POSN)
RECOMMEND P.W.B HOLE LAYOUT
(CONNECTOR MOUNTING SIDE)
FIG-1

LEAD FREE

OBSOLETED	0.00076	~~39~~	~~61.90~~	~~61.55~~	~~71.45~~	~~65.55~~	~~54.53~~	~~49.53~~	~~80~~	~~3-5175887-0~~
		49	74.60	74.25	84.15	78.25	67.23	62.23	100	2-5175887-9
		33	54.20	53.93	63.83	57.93	46.91	41.91	68	2-5175887-8
		24	42.80	42.50	52.40	46.50	35.48	30.48	50	2-5175887-7
		17	33.90	33.61	43.51	37.61	26.59	21.59	36	2-5175887-5
OBSOLETED		~~12~~	~~27.60~~	~~27.26~~	~~37.16~~	~~31.26~~	~~20.24~~	~~15.24~~	~~26~~	~~2-5175887-4~~
OBSOLETED		~~9~~	~~23.80~~	~~23.45~~	~~33.35~~	~~27.45~~	~~16.43~~	~~11.43~~	~~20~~	~~2-5175887-2~~
OBSOLETED		~~6~~	~~19.90~~	~~19.64~~	~~29.54~~	~~23.64~~	~~12.62~~	~~7.62~~	~~14~~	~~2-5175887-1~~
	0.0003	39	61.90	61.55	71.45	65.55	54.53	49.53	80	1-5175887-0
		49	74.60	74.25	84.15	78.25	67.23	62.23	100	5175887-9
OBSOLETED		~~33~~	~~54.20~~	~~53.93~~	~~63.83~~	~~57.93~~	~~46.91~~	~~41.91~~	~~68~~	~~5175887-8~~
		24	42.80	42.50	52.40	46.50	35.48	30.48	50	5175887-7
		17	33.90	33.61	43.51	37.61	26.59	21.59	36	5175887-5
		12	27.60	27.26	37.16	31.26	20.24	15.24	26	5175887-4
OBSOLETED		~~9~~	~~23.80~~	~~23.45~~	~~33.35~~	~~27.45~~	~~16.43~~	~~11.43~~	~~20~~	~~5175887-2~~
OBSOLETED		~~6~~	~~19.90~~	~~19.64~~	~~29.54~~	~~23.64~~	~~12.62~~	~~7.62~~	~~14~~	~~5175887-1~~
	AU PLATING	N	F	E	D	C	B	A	POSN	PART NO.

THIS DRAWING IS A CONTROLLED DOCUMENT.

DIMENSIONS: mm

TOLERANCES UNLESS OTHERWISE SPECIFIED:
0 PLC ± 0.2
1 PLC ± 0.2
2 PLC ± 0.2
3 PLC ± 0.2
4 PLC ± 0.2
ANGLES ± 3°

MATERIAL SEE NOTE 3
FINISH SEE NOTE 3

DWN COREL WANG 01SEP04
CHK STEVEN YAO 01SEP04
APVD I.ENOMOTO 01SEP04
PRODUCT SPEC 108-60043
APPLICATION SPEC
WEIGHT 0.000000

TE Connectivity Ltd.

NAME
REC HEADER ASSY, VERTICAL
CHAMP .050 SERIES (II) STD-TYPE (M2.6)

SIZE A3 | CAGE CODE 00779 | DRAWING NO C-5175887 | RESTRICTED TO

CUSTOMER DRAWING | SCALE 2:1 | SHEET 1 OF 1 | REV R