Chipsmall Limited consists of a professional team with an average of over 10 year of expertise in the distribution of electronic components. Based in Hongkong, we have already established firm and mutual-benefit business relationships with customers from,Europe,America and south Asia,supplying obsolete and hard-to-find components to meet their specific needs.

With the principle of “Quality Parts,Customers Priority,Honest Operation,and Considerate Service”,our business mainly focus on the distribution of electronic components. Line cards we deal with include Microchip,ALPS,ROHM,Xilinx,Pulse,ON,Everlight and Freescale. Main products comprise IC,Modules,Potentiometer,IC Socket,Relay,Connector.Our parts cover such applications as commercial,industrial, and automotives areas.

We are looking forward to setting up business relationship with you and hope to provide you with the best service and solution. Let us make a better world for our industry!

Contact us

Tel: +86-755-8981 8866 Fax: +86-755-8427 6832
Email & Skype: info@chipsmall.com Web: www.chipsmall.com
Address: A1208, Overseas Decoration Building, #122 Zhenhua RD., Futian, Shenzhen, China

THIS DRAWING IS UNPUBLISHED. RELEASED FOR PUBLICATION -,- .
© COPYRIGHT - By - ALL RIGHTS RESERVED.

LOC	DIST
FT	8

REVISIONS

P	LTR	DESCRIPTION	DATE	DWN	APVD
	AC2	REVISED PER ECO-11-004917	11MAR11	RK	HMR

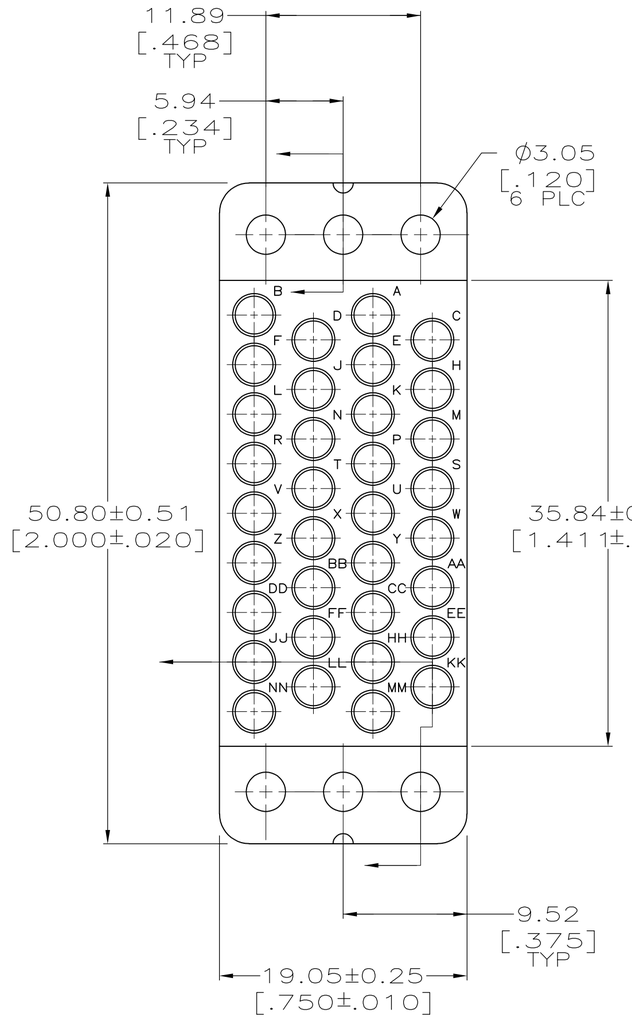

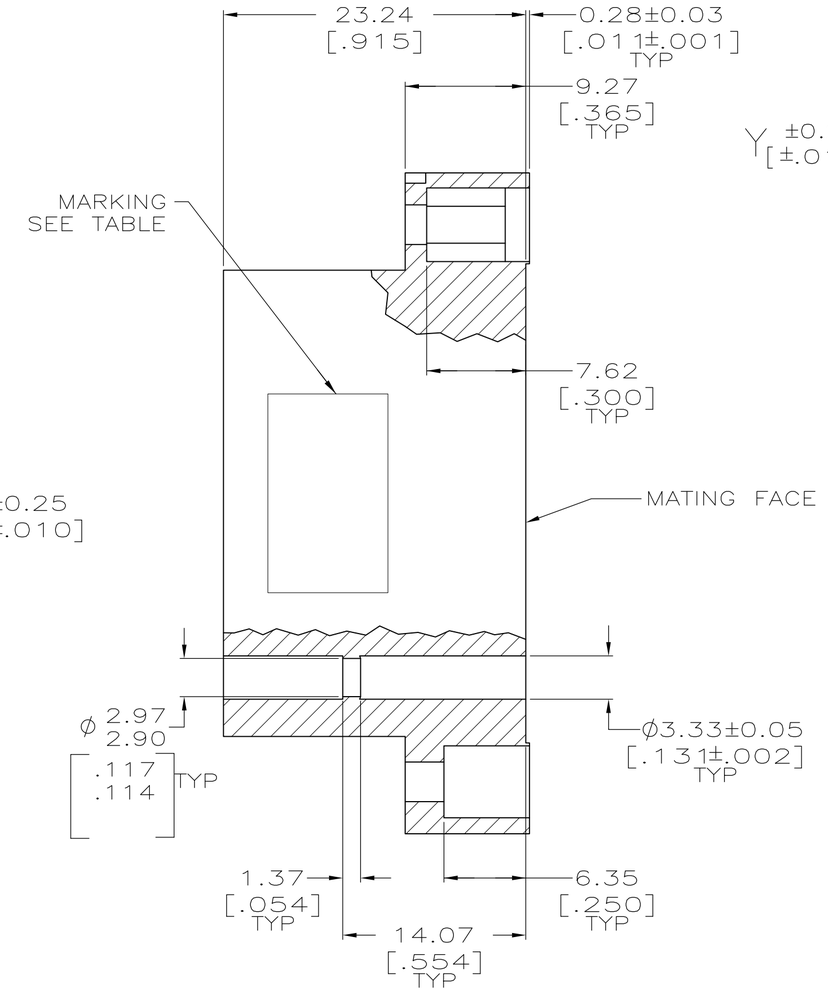

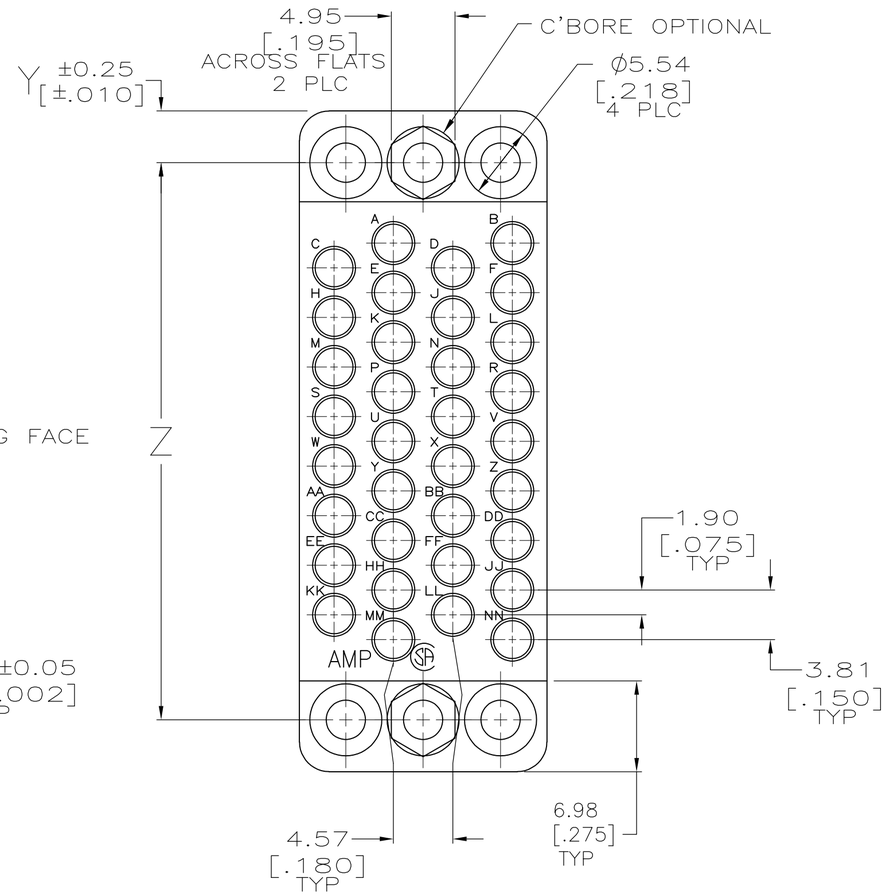

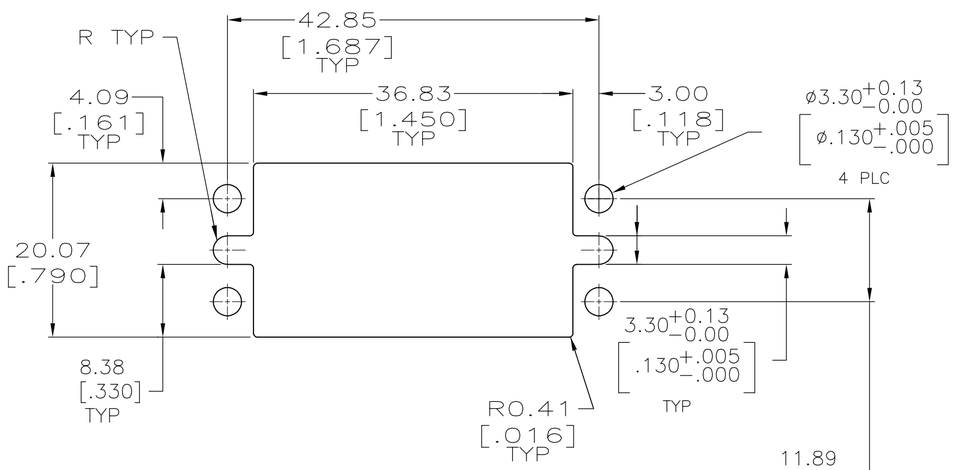

RECOMMENDED PANEL CUTOUT

1. PHENOLIC PER MIL-M-14, TYPE CFG, BLACK.
2. DIALLYL PHTHALATE PER MIL-M-14, TYPE SDG-F, BLACK.
3. AMP PART NO THIS AREA. DATE CODE AT AMP'S OPTION.
4. MARK KS 21303, L10.
5. WHEN MATING WITH BLOCK 201357, ACCOMODATES TYPE II, TYPE III+ OR TYPE VI #16 PIN OR SOCKET CONTACTS.
6. OBSOLETE PARTS: OBSOLETE CIS STREAMLINING PER D.RENAUD/D.SINISI

		Z	Y	MARKING	MATERIAL	PART NUMBER
6	OBSOLETE	43.08 [1.696]	3.86 [.152]	3 4	2	~~200838-9~~
		43.08 [1.696]	3.86 [.152]	3	2	200838-3
		42.82 [1.686]	3.99 [.157]	3	1	200838-2

THIS DRAWING IS A CONTROLLED DOCUMENT.

DIMENSIONS: mm [INCHES]

TOLERANCES UNLESS OTHERWISE SPECIFIED:
0 PLC ± -
1 PLC ± -
2 PLC ± 0.13 [.005]
3 PLC ± -
4 PLC ± -
ANGLES ± 1°

MATERIAL: SEE TABLE
FINISH: -

DWN C.REIFSNYDER 07 DEC 95
CHK R.STONE 29 FEB 96
APVD G.A.STEINHAUER 20 MAR 96
PRODUCT SPEC —
APPLICATION SPEC —
WEIGHT —

TE Connectivity

NAME: BLOCK, FEMALE, 34 PLACE MINIATURE RECTANGULAR, M SERIES

SIZE	CAGE CODE	DRAWING NO	RESTRICTED TO
A2	00779	C-200838	—

CUSTOMER DRAWING | SCALE 3:1 | SHEET 1 OF 1 | REV AC2

200838

1471-9 (3/11)