Chipsmall Limited consists of a professional team with an average of over 10 year of expertise in the distribution of electronic components. Based in Hongkong, we have already established firm and mutual-benefit business relationships with customers from,Europe,America and south Asia,supplying obsolete and hard-to-find components to meet their specific needs.

With the principle of “Quality Parts,Customers Priority,Honest Operation,and Considerate Service”,our business mainly focus on the distribution of electronic components. Line cards we deal with include Microchip,ALPS,ROHM,Xilinx,Pulse,ON,Everlight and Freescale. Main products comprise IC,Modules,Potentiometer,IC Socket,Relay,Connector.Our parts cover such applications as commercial,industrial, and automotives areas.

We are looking forward to setting up business relationship with you and hope to provide you with the best service and solution. Let us make a better world for our industry!

Contact us

Tel: +86-755-8981 8866 Fax: +86-755-8427 6832
Email & Skype: info@chipsmall.com Web: www.chipsmall.com
Address: A1208, Overseas Decoration Building, #122 Zhenhua RD., Futian, Shenzhen, China

THIS DRAWING IS UNPUBLISHED. RELEASED FOR PUBLICATION -,- .
© COPYRIGHT - BY TYCO ELECTRONICS CORPORATION. ALL RIGHTS RESERVED.

LOC	DIST
J	—

REVISIONS
変更

P	LTR	DESCRIPTION	DATE	DWN	APVD
	A	REVISED	28JUL'09	J.M	T.N

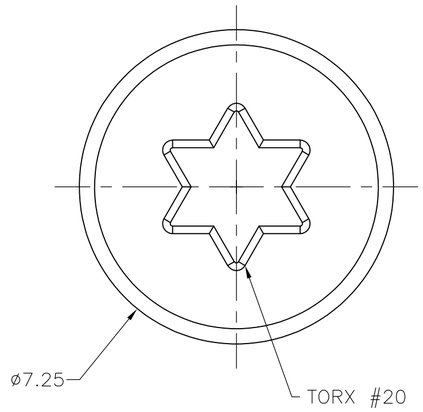

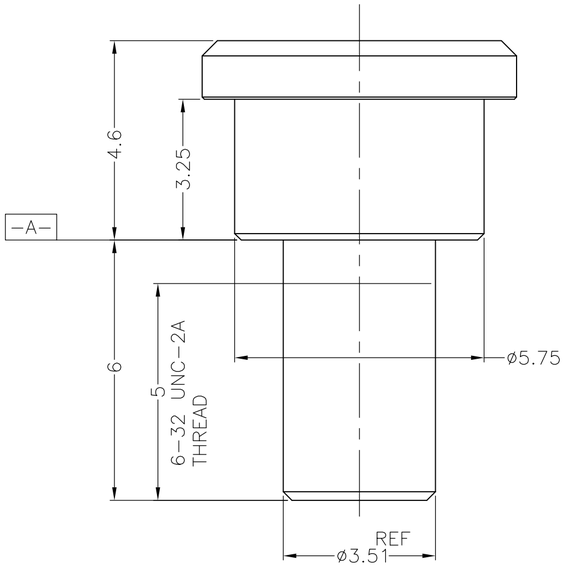

1. MATERIAL: STEEL
   FINISH: Ni PLATING
2. APPLICABLE ILM ASSEMBLY P/N: 2013882 SERIES

2013884-1 AS SHOWN

2013884-1
PART NUMBER

THIS DRAWING IS A CONTROLLED DOCUMENT.

DIMENSIONS: 単位：耗 mm

TOLERANCES UNLESS OTHERWISE SPECIFIED: 一般公差
0 PLC ± - ±0.3
1 PLC ± -
2 PLC ± - ±3°
3 PLC ± -
4 PLC ± -
ANGLES ±

MATERIAL 材料 -
FINISH 仕上 -

DWN	J.MIZUSHIMA	03JUL2009
CHK	H.TAGUCHI	03JUL2009
APVD	T.NAKASHIMA	03JUL2009
PRODUCT SPEC 製品規格	108-78586	
APPLICATION SPEC 取付適用規格	114-5444	
WEIGHT	1.2g	

Tyco Electronics
Tyco Electronics Corporation
Kawasaki, Japan

NAME 名称: SHOULDER SCREW LGA115X

SIZE	CAGE CODE	DRAWING NO 番号	RESTRICTED TO
A2	00779	C-2013884	—

CUSTOMER DRAWING

SCALE 尺度	SHEET	REV
10:1	1 OF 1	A

2013884