Chipsmall Limited consists of a professional team with an average of over 10 year of expertise in the distribution of electronic components. Based in Hongkong, we have already established firm and mutual-benefit business relationships with customers from,Europe,America and south Asia,supplying obsolete and hard-to-find components to meet their specific needs.

With the principle of “Quality Parts,Customers Priority,Honest Operation,and Considerate Service”,our business mainly focus on the distribution of electronic components. Line cards we deal with include Microchip,ALPS,ROHM,Xilinx,Pulse,ON,Everlight and Freescale. Main products comprise IC,Modules,Potentiometer,IC Socket,Relay,Connector.Our parts cover such applications as commercial,industrial, and automotives areas.

We are looking forward to setting up business relationship with you and hope to provide you with the best service and solution. Let us make a better world for our industry!

Contact us

Tel: +86-755-8981 8866 Fax: +86-755-8427 6832
Email & Skype: info@chipsmall.com Web: www.chipsmall.com
Address: A1208, Overseas Decoration Building, #122 Zhenhua RD., Futian, Shenzhen, China

NOTES:
1. MOUNTING TYPE: SCREW.
2. VOLTAGE: 600 V (UL).
3. CURRENT: Cu 380 A, Al 310 A (UL).
3. WIRE CROSS-SECTION RANGE, UL:
   Cu/Al 3/0 AWG - 500mm² (85 - 500mm²) STRANDED
   3X 1/0-2 AWG (3X 53-33.6mm²) STRANDED
   2X 2/0-2 AWG (2X 67-33.6mm²) STRANDED
4. HEAD CAP SCREW WITH 8mm HEXAGON SOCKET SIZE.
5. RECOMMENDED TIGHTENING TORQUE: 360 Lb-In (40 Nm).
6. ALL ELECTRICAL AND MECHANICAL SPECIFICATIONS ARE PER UL1059 AS NOTED IN MOLEX UL AGENCY APPROVAL.
7. THE SUITABILITY OF THESE TERMINALS SHALL BE DETERMINED IN THE END-USE INVESTIGATION.
8. AS ENVIRONMENTAL BARRIER DIELECTRIC GREASE MAY BE PRESENT IN THE WIRING CHAMBER. ENSURE TO USE THE RECOMMENDED TIGHTING TORQUE FOR ALL CONDUCTORS.

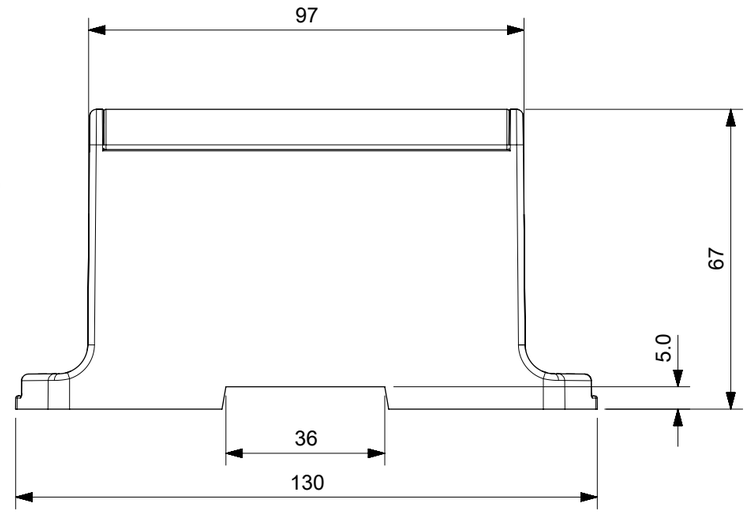

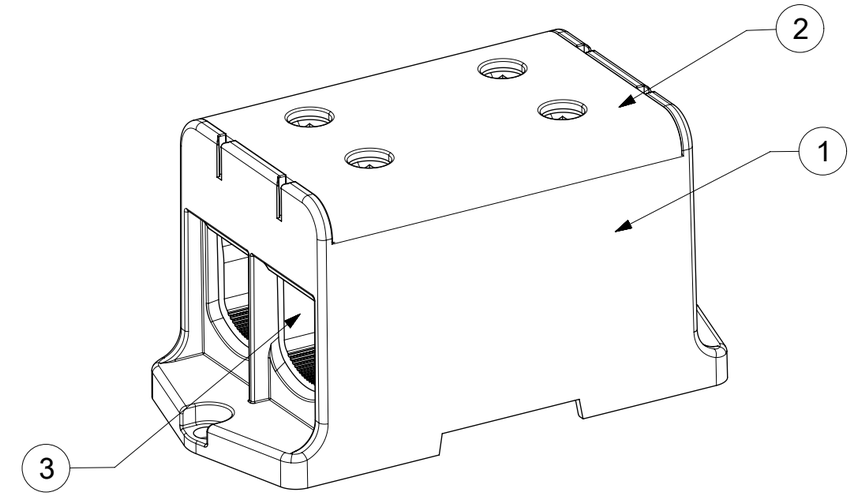

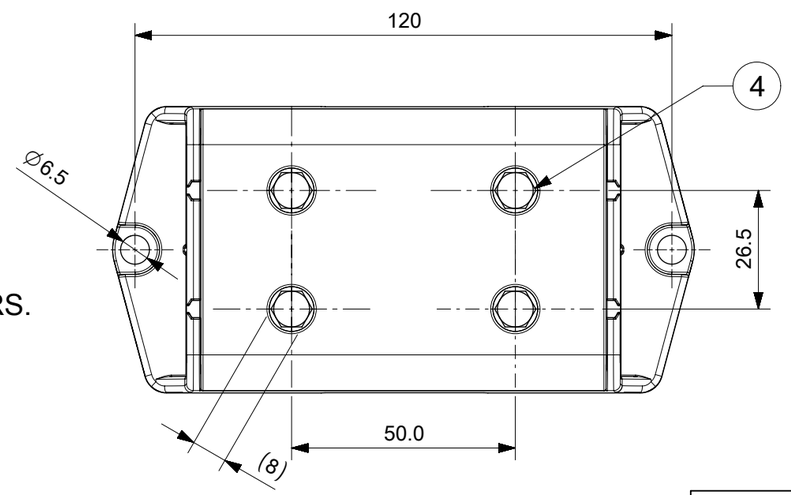

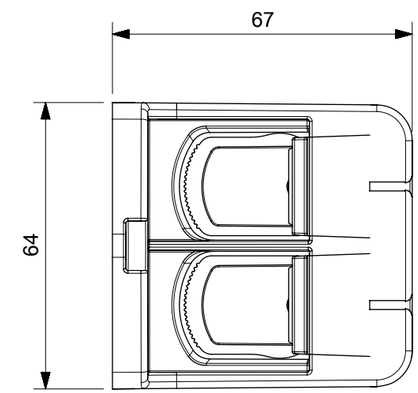

MATERIAL No	ENGINEERING No	DESCRIPTION	COVER COLOR	HOUSING COLOR
2016060693	MX-KE69.3	UCLP 1PLD GRN/YLW W/SCR 380A	YELLOW	GREEN
2016060692	MX-KE69.2	UCLP 1PLD GRY/BLU W/SCR 380A	BLUE	GREY
2016060690	MX-KE69	UCLP 1PLD GRY/GRY W/SCR 380A	GREY	GREY

ITEM	QTY	DESCRIPTION	MATERIAL
4	4	SCREW, SET	ALUMINUM
3	1	CAGE, 1-P	ALUMINIUM
2	1	COVER, 2-P, W-SNAP HOOKS	POLYAMIDE
1	1	HOUSING, 2-P	POLYAMIDE

RELEASE STATUS: P1 | RELEASE DATE: 18.08.2017 19:46:49

TOLERANCE	>0.5=3	>3=6	>6=30	>30=120	>120=400
ISO 2768-m	±0.1	±0.1	±0.2	±0.3	±0.5

THIS DRAWING CONTAINS INFORMATION THAT IS PROPRIETARY TO MOLEX ELECTRONIC TECHNOLOGIES, LLC AND SHOULD NOT BE USED WITHOUT WRITTEN PERMISSION

RELEASE
EC NO: 120665 2017/08/14
DRWN: WLEUNG 2017/08/15
CHK'D: DNGUYEN62 2017/08/18
APPR: JFMURPHY
REV: A

GENERAL TOLERANCES (UNLESS SPECIFIED)
ANGULAR TOL ± °
4 PLACES ±
3 PLACES ±
2 PLACES ± SEE CHART
1 PLACE ± SEE CHART
0 PLACES ±
DRAFT WHERE APPLICABLE MUST REMAIN WITHIN DIMENSIONS

DIMENSION UNITS: mm
SCALE: 1:1
DRWN BY: WLEUNG DATE: 2017/08/14
CHK'D BY: DNGUYEN62 DATE: 2017/08/15
APPR BY: JFMURPHY DATE: 2017/08/18
DRAWING SIZE: B
THIRD ANGLE PROJECTION

molex®

MX-KE69
AL/CU 35-240MM²

PRODUCT CUSTOMER DRAWING

SERIES: 201606
MATERIAL NUMBER: SEE CHART
CUSTOMER:
DOCUMENT NUMBER: 2016060690
DOC TYPE: PSD
DOC PART: 000
SHEET NUMBER: 1 OF 1

FORMAT: lb-prod-B
REVISION: G
DATE: 2015/12/14