Chipsmall Limited consists of a professional team with an average of over 10 year of expertise in the distribution of electronic components. Based in Hongkong, we have already established firm and mutual-benefit business relationships with customers from,Europe,America and south Asia,supplying obsolete and hard-to-find components to meet their specific needs.

With the principle of “Quality Parts,Customers Priority,Honest Operation,and Considerate Service”,our business mainly focus on the distribution of electronic components. Line cards we deal with include Microchip,ALPS,ROHM,Xilinx,Pulse,ON,Everlight and Freescale. Main products comprise IC,Modules,Potentiometer,IC Socket,Relay,Connector.Our parts cover such applications as commercial,industrial, and automotives areas.

We are looking forward to setting up business relationship with you and hope to provide you with the best service and solution. Let us make a better world for our industry!

Contact us

Tel: +86-755-8981 8866 Fax: +86-755-8427 6832
Email & Skype: info@chipsmall.com Web: www.chipsmall.com
Address: A1208, Overseas Decoration Building, #122 Zhenhua RD., Futian, Shenzhen, China

THIS DRAWING IS UNPUBLISHED. RELEASED FOR PUBLICATION APR ,2008.
© COPYRIGHT 2008 BY TYCO ELECTRONICS CORPORATION. ALL RIGHTS RESERVED.

LOC	DIST
J	—

REVISIONS 変更

P	LTR	DESCRIPTION	DATE	DWN	APVD
	A	RELEASED	16JUL2008	C.O	Y.N

引き出し方向
USER DIRECTION OF FEED

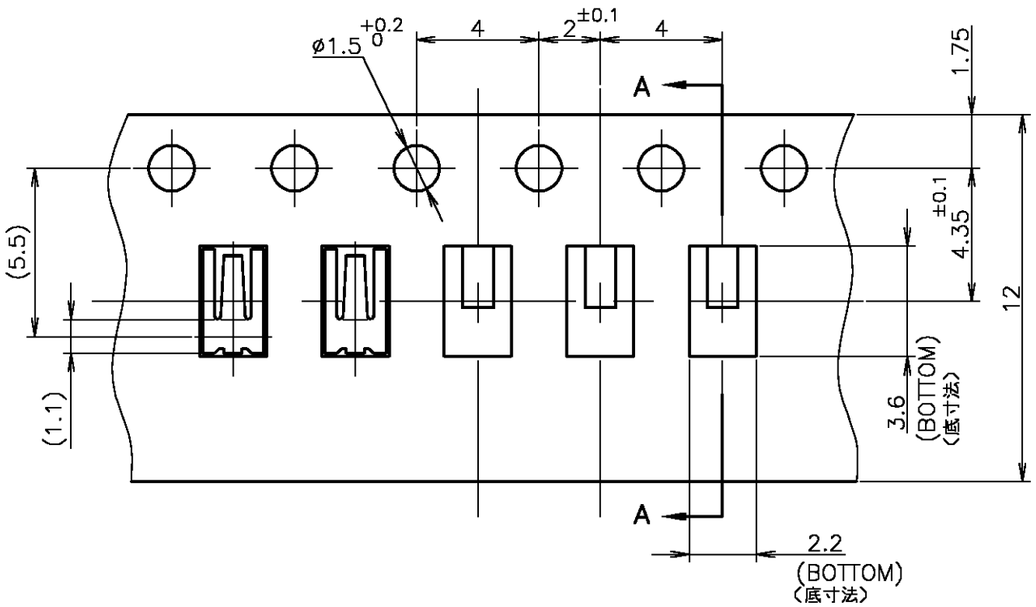

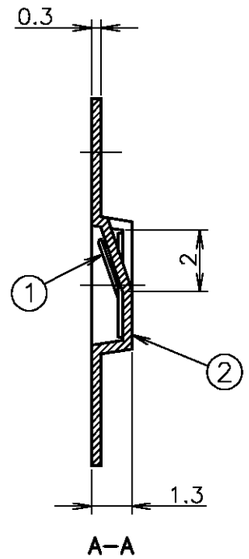

1 GENERAL TOLERANCE: ±0.3
2 PACKING STYLE: 5,000PCS/REEL
3 MATERIAL:
SHIELD FINGER: COPPER ALLOY (NICKEL–PLATING)
(Au PL. 0.00005 MIN.)
(SOLDER–PLATING ON THE BOTTOM PLANE ONLY)
CARRIER TAPE: ACRYLIC FILM
TOP TAPE: PET FILM
REEL: PLASTIC
4 TAPES DIMENSION

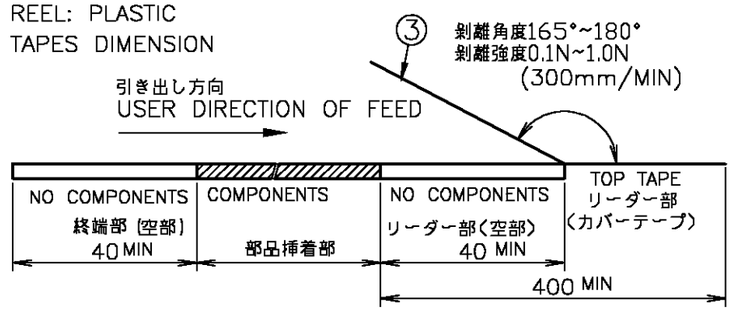

5 REEL DIMENSION: REFERENCE ONLY

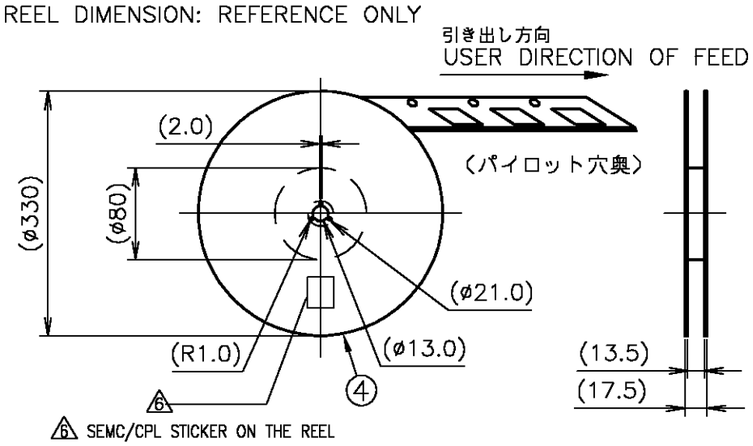

シールドフィンガー0820
SHIELD FINGER 0820
SCALE 10:1

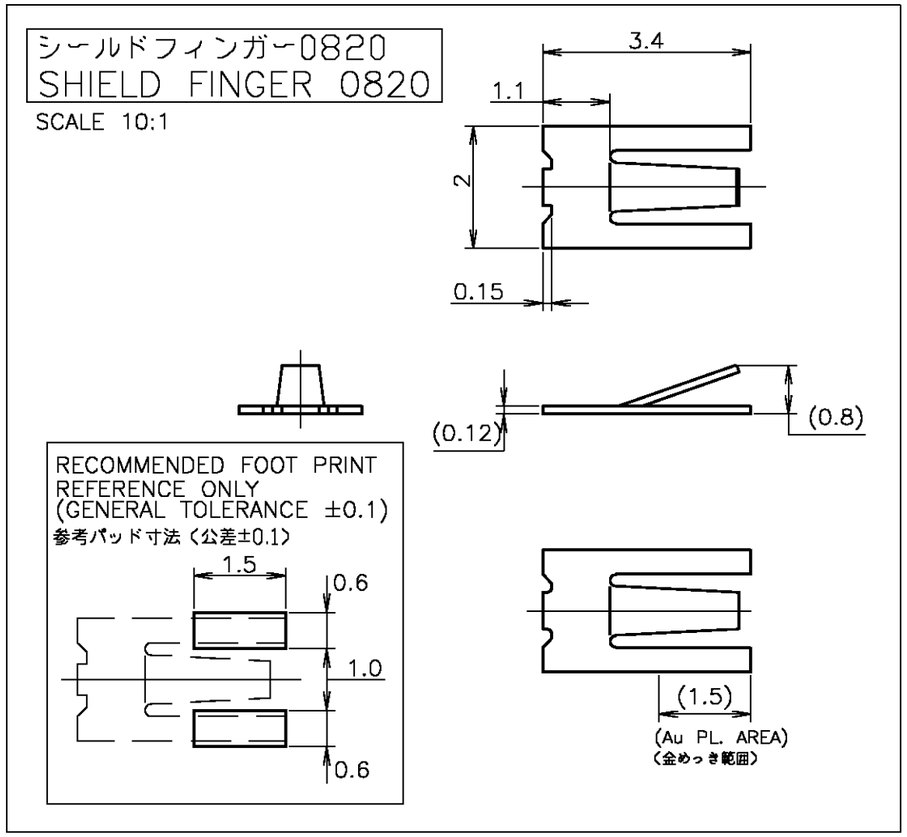

PACKING CAT.NO.	NO.	NAME	名称	QUANTITY
2040852–1	4	REEL	リール	1
	3	COVER TAPE	カバーテープ	1
	2	EMBOSS CARRIER TAPE	エンボスキャリアテープ	5000 POKETS (COMPONENTS)
	1	SHIELD FINGER 0820	シールドフィンガー0820	5000 PCS

THIS DRAWING IS A CONTROLLED DOCUMENT.

DIMENSIONS: 単位：耗 mm

TOLERANCES UNLESS OTHERWISE SPECIFIED: 一般公差
0 PLC ±
1 PLC ± SEE NOTE
2 PLC ±
3 PLC ±
4 PLC ±
ANGLES ±

MATERIAL 材料 3
FINISH 仕上

DWN C.OHASHI 16JUL2008
CHK Y.NAKAZAWA 16JUL2008
APVD Y.NAKAZAWA 16JUL2008
PRODUCT SPEC 製品規格
APPLICATION SPEC 取付適用規格
WEIGHT

CUSTOMER DRAWING

Tyco Electronics
Tyco Electronics Corporation
Kawasaki, Japan

NAME 名称: SHIELD FINGER 0820

SIZE	CAGE CODE	DRAWING NO 番号	RESTRICTED TO
A3	00779	C-2040852	—

SCALE 尺度 5:1 SHEET 1 OF 1 REV A