Chipsmall Limited consists of a professional team with an average of over 10 year of expertise in the distribution of electronic components. Based in Hongkong, we have already established firm and mutual-benefit business relationships with customers from,Europe,America and south Asia,supplying obsolete and hard-to-find components to meet their specific needs.

With the principle of “Quality Parts,Customers Priority,Honest Operation,and Considerate Service”,our business mainly focus on the distribution of electronic components. Line cards we deal with include Microchip,ALPS,ROHM,Xilinx,Pulse,ON,Everlight and Freescale. Main products comprise IC,Modules,Potentiometer,IC Socket,Relay,Connector.Our parts cover such applications as commercial,industrial, and automotives areas.

We are looking forward to setting up business relationship with you and hope to provide you with the best service and solution. Let us make a better world for our industry!

Contact us

Tel: +86-755-8981 8866 Fax: +86-755-8427 6832
Email & Skype: info@chipsmall.com Web: www.chipsmall.com
Address: A1208, Overseas Decoration Building, #122 Zhenhua RD., Futian, Shenzhen, China

CIRCUIT SIZES
SCALE 4:1

2 CKT

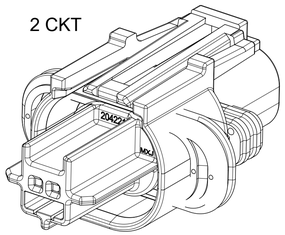

4 CKT

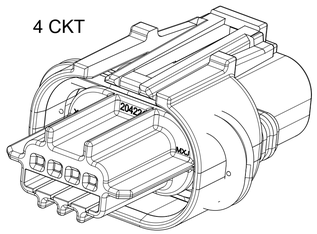

6 CKT

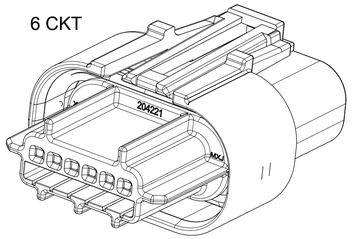

8 CKT

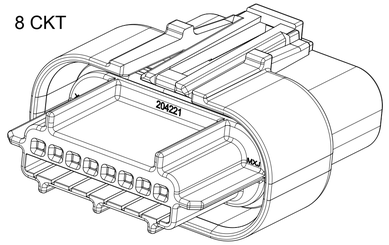

10 CKT

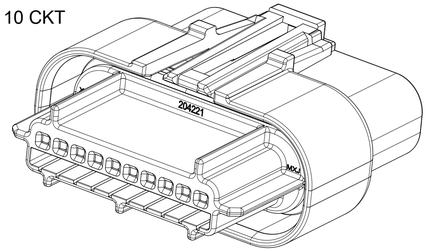

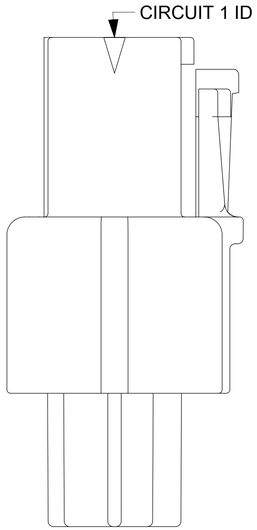

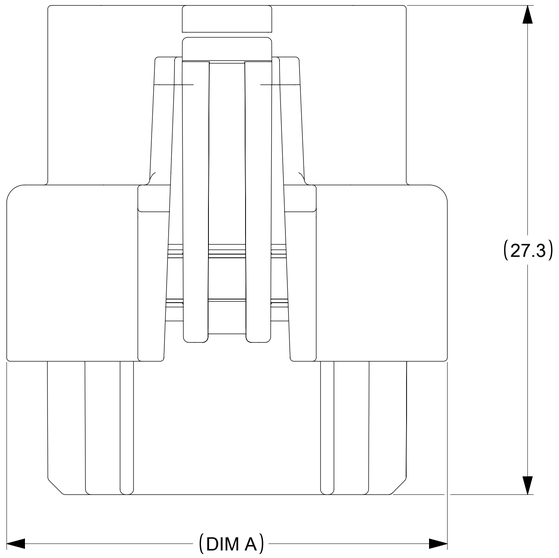

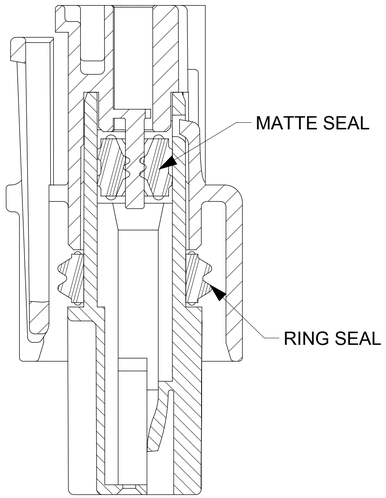

SECTION A-A
TERMINAL SHOWN INSERTED
INTO HOUSING

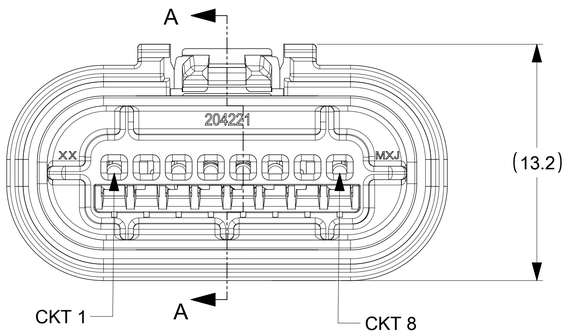

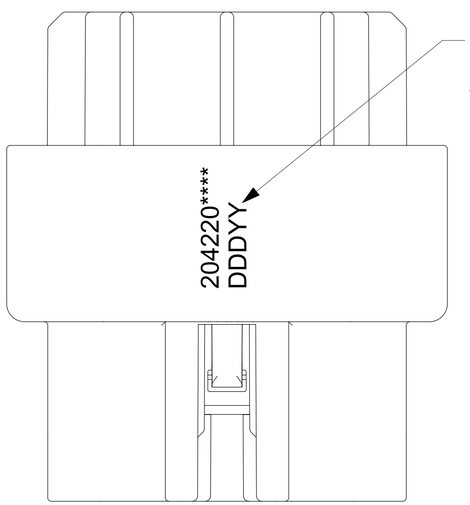

LASER MARK THIS SURFACE
MOLEX PART NUMBER AND
JULIAN DATE CODE: DDDYY

NOTES:
1. MATERIAL:
   HOUSING & REAR SEAL CAP: NYLON, UL94V-0, COLOR: BLACK
   SEALS: INHERENTLY LUBRICATED SILICONE
2. FINISH: NONE
3. PRODUCT SPECIFICATION: 2042200000-PS
4. APPLICATION SPECIFICATION: 2042200000-AS
5. PACKAGING SPECIFICATION: 2042200000-PK
6. PART MATES WITH PLUG SERIES 204223.
7. PART USES TERMINAL PART NUMBER 2043010001.
8. PART CONFORMS TO COSMETIC SPEC: PS-45499-002 CLASS C

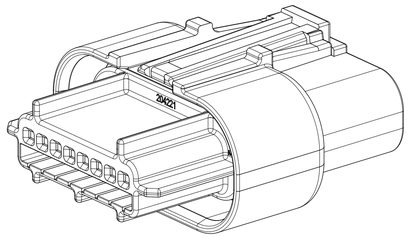

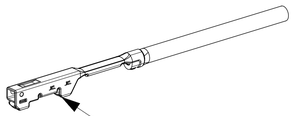

MOLEX TERMINAL
NUMBER 2043010001

CIRCUIT SIZE	MATERIAL NUMBER	VOID IN CKT	DIM A
2	204220-0002	NONE	13.8
4	204220-0004	NONE	17.4
6	204220-0006	NONE	21.0
8	204220-0008	NONE	24.6
10	204220-0010	NONE	28.2
4	204220-4004	4	17.4
6	204220-6006	6	21.0
8	204220-8008	8	24.6
10	204220-1110	10	28.2

SYMBOLS	
A = 0	
E = 0	
F = 0	
S = 0	
= 0	
C = 0	
= 0	
= 0	
V = 0	

THIS DRAWING CONTAINS INFORMATION THAT IS PROPRIETARY TO MOLEX ELECTRONIC TECHNOLOGIES, LLC AND SHOULD NOT BE USED WITHOUT WRITTEN PERMISSION

DIMENSION UNITS	SCALE
mm	6:1

GENERAL TOLERANCES (UNLESS SPECIFIED)		
ANGULAR TOL	±	°
4 PLACES	±	
3 PLACES	±	
2 PLACES	±	0.2
1 PLACE	±	
0 PLACES	±	

DRAFT WHERE APPLICABLE MUST REMAIN WITHIN DIMENSIONS

CURRENT REV DESC: ADD 13.2 REF

EC NO: 177472
DRWN: KSAMIEC 2018/05/30
CHK'D: FSMITH 2018/06/01
APPR: FSMITH 2018/06/01

INITIAL REVISION:
DRWN: TGREGORI 2017/04/26
APPR: RHODGE 2018/01/26

THIRD ANGLE PROJECTION | DRAWING: D-SIZE | SERIES: 204220

molex

RECEPTACLE ASSEMBLY
SQUBA 1.8

PRODUCT CUSTOMER DRAWING

DOCUMENT NUMBER	DOC TYPE	DOC PART	REVISION
2042200000-SD	PSD	000	A5

MATERIAL NUMBER	CUSTOMER	SHEET NUMBER
	GENERAL MARKET	1 OF 1

DOCUMENT STATUS	P1	RELEASE DATE	2018/06/01 22:11:50