Chipsmall Limited consists of a professional team with an average of over 10 year of expertise in the distribution of electronic components. Based in Hongkong, we have already established firm and mutual-benefit business relationships with customers from,Europe,America and south Asia,supplying obsolete and hard-to-find components to meet their specific needs.

With the principle of “Quality Parts,Customers Priority,Honest Operation,and Considerate Service”,our business mainly focus on the distribution of electronic components. Line cards we deal with include Microchip,ALPS,ROHM,Xilinx,Pulse,ON,Everlight and Freescale. Main products comprise IC,Modules,Potentiometer,IC Socket,Relay,Connector.Our parts cover such applications as commercial,industrial, and automotives areas.

We are looking forward to setting up business relationship with you and hope to provide you with the best service and solution. Let us make a better world for our industry!

Contact us

Tel: +86-755-8981 8866 Fax: +86-755-8427 6832
Email & Skype: info@chipsmall.com Web: www.chipsmall.com
Address: A1208, Overseas Decoration Building, #122 Zhenhua RD., Futian, Shenzhen, China

THIS DRAWING IS UNPUBLISHED. RELEASED FOR PUBLICATION –,– .
© COPYRIGHT – By – ALL RIGHTS RESERVED.

LOC	DIST
FT	0

REVISIONS

P	LTR	DESCRIPTION	DATE	DWN	APVD
	P3	REVISED PER ECO–11–004587	11MAR11	RK	HMR

1 PARTS PACKAGED UNASSEMBLED.

2 CABLE CLAMPING AREA ADJUSTABLE FROM .100 TO .410 SQ IN BY REVERSING CLAMPING INSERTS. (2 INSERTS SUPPLIED, –1 AND –2 ONLY)

3 CABLE CLAMPING AREA ADJUSTABLE FROM .100 TO .410 SQ IN BY CHANGING CLAMPING INSERTS. (4 INSERTS SUPPLIED, –4 ONLY)

4 .703 MAXIMUM CABLE OUTSIDE DIAMETER.

5 BULK PACKAGED KITS TO BE ORDERED IN MULTIPLES OF 100 ONLY.

6 NON–HEXAVALENT CHROMATE FINISH.

7 OBSOLETE PARTS: OBSOLETE CIS STREAMLINING PER D.RENAUD/D.SINISI

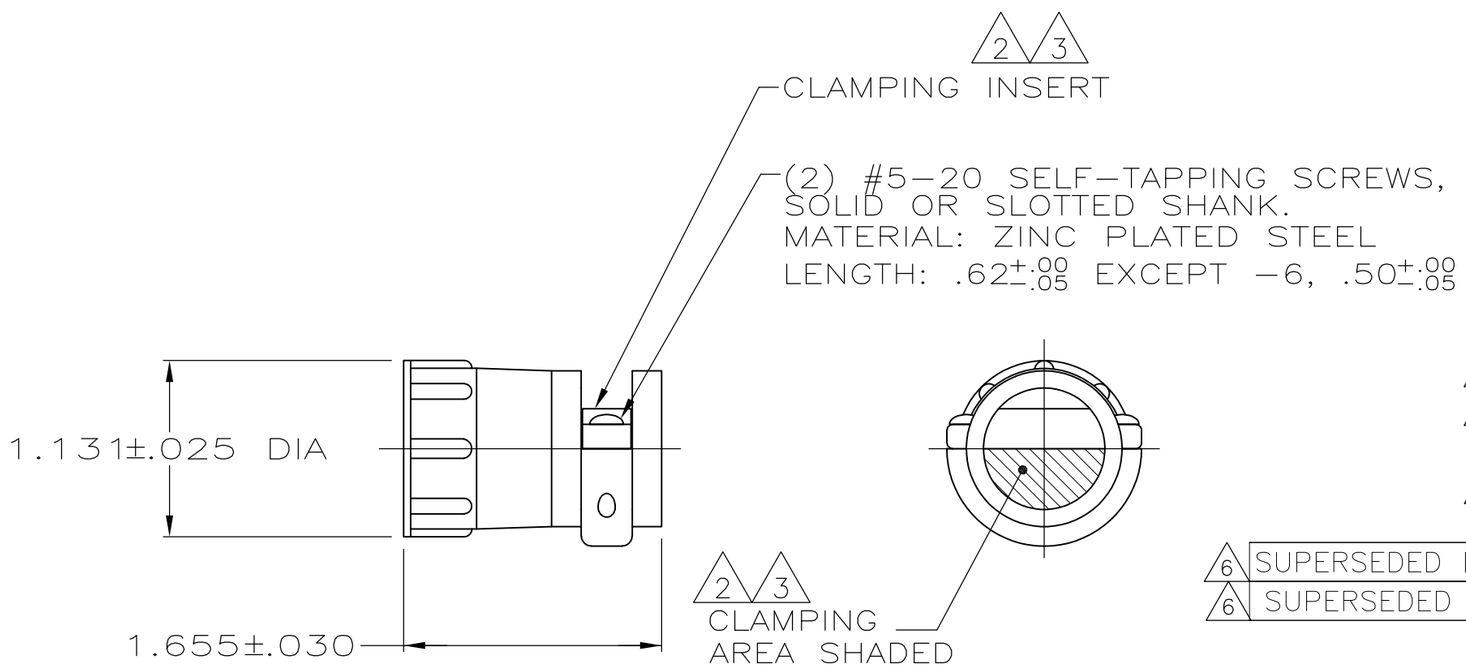

	PACKAGING	PART NUMBER
6	INDIVIDUAL	1–206322–1
6	5 BULK	1–206322–0
6	INDIVIDUAL	206322–9
6 7 OBSOLETE	~~SMALL PACK~~	~~206322–8~~
6 7 OBSOLETE	~~INDIVIDUAL~~	~~206322–7~~
6	5 BULK	206322–6
7 6 OBSOLETE	~~SMALL PACK~~	~~206322–5~~
OBSOLETE	~~INDIVIDUAL~~	~~206322–4~~
6 SUPERSEDED BY 1–206322–0	5 BULK	206322–2
6 SUPERSEDED BY 206322–9	INDIVIDUAL	206322–1

THIS DRAWING IS A CONTROLLED DOCUMENT.

DIMENSIONS: INCHES

TOLERANCES UNLESS OTHERWISE SPECIFIED:
0 PLC ± –
1 PLC ± –
2 PLC ± –
3 PLC ± –
4 PLC ± –
ANGLES ± –

MATERIAL: THERMOPLASTIC
FINISH: –

DWN A GRAFF 4/23/91
CHK W.G.LENKER 7–22–92
APVD – –
PRODUCT SPEC 108–10024
APPLICATION SPEC –
WEIGHT –

TE Connectivity

NAME: CABLE CLAMP KIT, LARGE, SHELL SIZE 17, CPC

SIZE	CAGE CODE	DRAWING NO	RESTRICTED TO
A3	00779	C–206322	–

CUSTOMER DRAWING | SCALE NTS | SHEET 1 OF 1 | REV P3

1470–19 (3/11)