Chipsmall Limited consists of a professional team with an average of over 10 year of expertise in the distribution of electronic components. Based in Hongkong, we have already established firm and mutual-benefit business relationships with customers from,Europe,America and south Asia,supplying obsolete and hard-to-find components to meet their specific needs.

With the principle of “Quality Parts,Customers Priority,Honest Operation,and Considerate Service”,our business mainly focus on the distribution of electronic components. Line cards we deal with include Microchip,ALPS,ROHM,Xilinx,Pulse,ON,Everlight and Freescale. Main products comprise IC,Modules,Potentiometer,IC Socket,Relay,Connector.Our parts cover such applications as commercial,industrial, and automotives areas.

We are looking forward to setting up business relationship with you and hope to provide you with the best service and solution. Let us make a better world for our industry!

Contact us

Tel: +86-755-8981 8866 Fax: +86-755-8427 6832
Email & Skype: info@chipsmall.com Web: www.chipsmall.com
Address: A1208, Overseas Decoration Building, #122 Zhenhua RD., Futian, Shenzhen, China

THIS DRAWING IS UNPUBLISHED. RELEASED FOR PUBLICATION 20
© COPYRIGHT 20 BY - ALL RIGHTS RESERVED.

LOC	DIST
-	-

REVISIONS

P	LTR	DESCRIPTION	DATE	DWN	APVD
	A	INITIAL RELEASE	02MAR2012	BM	DO

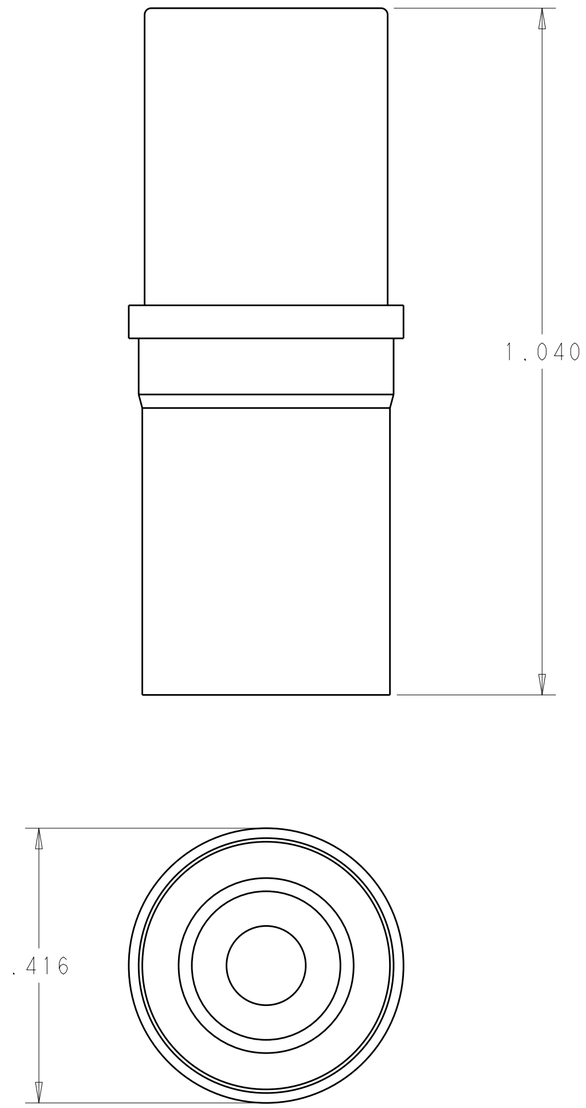

1. PART NUMBER CHANGES AND/OR DESIGN CHANGES AFFECTING ITEM INTERCHANGEABILITY REQUIRE PRIOR TYCO ELECTRONICS APPROVAL AND AUTHORIZATION BY REVISION TO THIS DRAWING.

2. ITEMS PROVIDED TO THIS SPECIFICATION TO BE PERMANENTLY IDENTIFIED PER THE FLOOWING IDENTIFIER:

TYCO ELECTRONICS P/N: XXXXXXX-X

DATE CODE (e.g. 0225): XXXX (YEAR: 2 digits, WEEK: 2 digits)

3. MATERIAL: COPPER ALLOY.

4. FINISH: SILVER PLATED, .000100 MIN THICK OVER NICKEL, .000050 MIN THICK.

2085999-1

PART NUMBER

THIS DRAWING IS A CONTROLLED DOCUMENT.

DIMENSIONS: INCHES

TOLERANCES UNLESS OTHERWISE SPECIFIED:
0 PLC ±-
1 PLC ±-
2 PLC ±.02
3 PLC ±.010
4 PLC ±-
ANGLES ±.5°

MATERIAL 3

FINISH 4

DWN B. MATTHEWS 02MAR2012
CHK D. ORRIS 02MAR2012
APVD D. ORRIS 02MAR2012

PRODUCT SPEC -
APPLICATION SPEC -
WEIGHT -

CUSTOMER DRAWING

TE Connectivity

NAME CONTACT, SOCKET, SIZE 1/4 INCH WITH #6 AWG CRIMP BARREL, SINGLE CROWN
-

SIZE	CAGE CODE	DRAWING NO	RESTRICTED TO
A2	00779	C-2085999	-

SCALE 6:1 SHEET 1 OF 1 REV A

1471-9 (3/11)

Pro/ENGINEER DRAWING