Chipsmall Limited consists of a professional team with an average of over 10 year of expertise in the distribution of electronic components. Based in Hongkong, we have already established firm and mutual-benefit business relationships with customers from,Europe,America and south Asia,supplying obsolete and hard-to-find components to meet their specific needs.

With the principle of “Quality Parts,Customers Priority,Honest Operation,and Considerate Service”,our business mainly focus on the distribution of electronic components. Line cards we deal with include Microchip,ALPS,ROHM,Xilinx,Pulse,ON,Everlight and Freescale. Main products comprise IC,Modules,Potentiometer,IC Socket,Relay,Connector.Our parts cover such applications as commercial,industrial, and automotives areas.

We are looking forward to setting up business relationship with you and hope to provide you with the best service and solution. Let us make a better world for our industry!

Contact us

Tel: +86-755-8981 8866 Fax: +86-755-8427 6832
Email & Skype: info@chipsmall.com Web: www.chipsmall.com
Address: A1208, Overseas Decoration Building, #122 Zhenhua RD., Futian, Shenzhen, China

THIS DRAWING IS UNPUBLISHED. RELEASED FOR PUBLICATION -,- .
© COPYRIGHT - BY TYCO ELECTRONICS CORPORATION. ALL RIGHTS RESERVED.

LOC	DIST
CM	0

REVISIONS

P	LTR	DESCRIPTION	DATE	DWN	APVD
	C1	REVISED PER ECO-05-011422	21OCT05	KW	DB

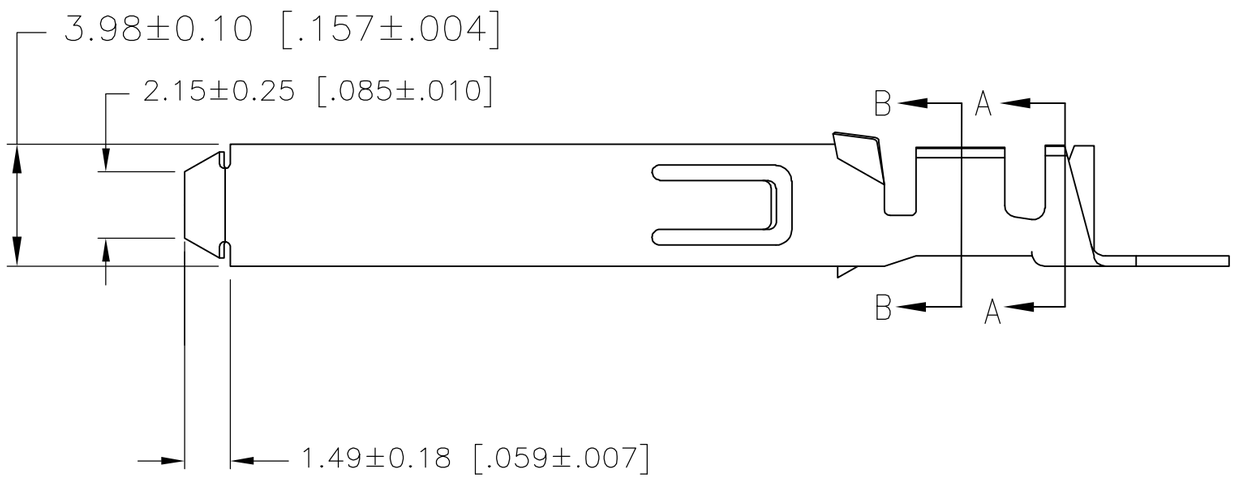

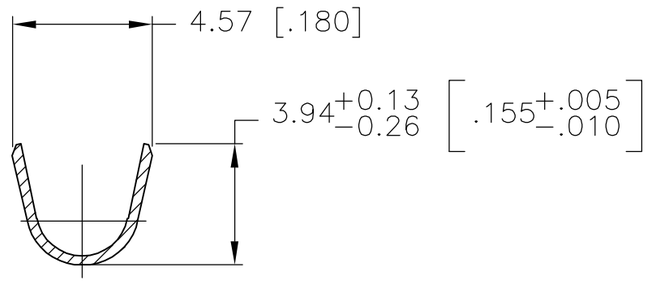

SECTION A–A

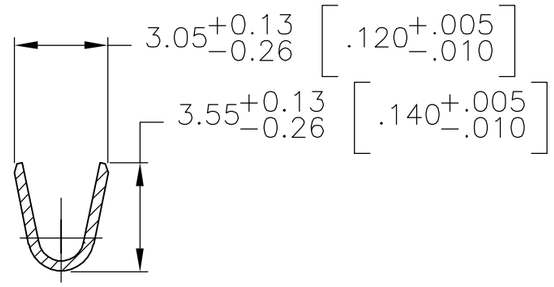

SECTION B–B

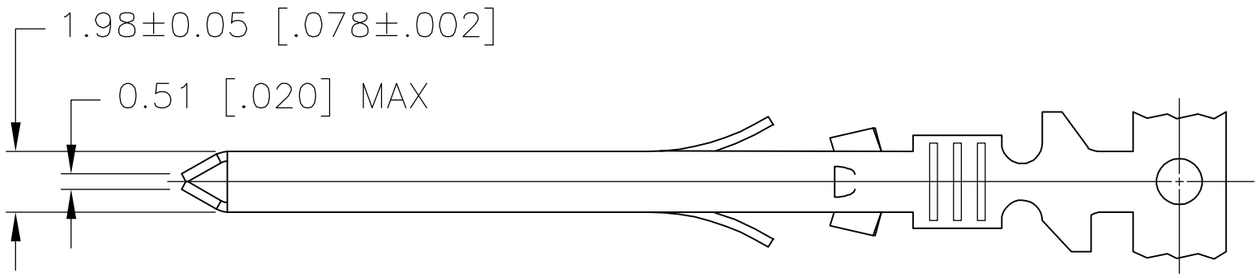

1. ACCOMMODATES 14 THRU 18 AWG WIRE INSULATION. RANGE 2.03 – 3.43 [.080 – .135] DIA.

TIN	208914-4
TIN-LEAD	208914-2
FINISH	PART NUMBER

THIS DRAWING IS A CONTROLLED DOCUMENT.

DIMENSIONS: mm [INCHES]

TOLERANCES UNLESS OTHERWISE SPECIFIED:

0 PLC	± –
1 PLC	± –
2 PLC	± –
3 PLC	± 0.13 [.005]
4 PLC	± –
ANGLES	± 0°30'

MATERIAL –

FINISH –

METRIC

DWN K. WHITAKER 26OCT2005
CHK D. BOSSI 26OCT2005
APVD D. BOSSI 26OCT2005
PRODUCT SPEC —
APPLICATION SPEC —
WEIGHT —

Tyco Electronics Corporation
Harrisburg, PA 17105-3608

NAME CONTACT, RECEPTACLE, POWER CORD
—
—

SIZE	CAGE CODE	DRAWING NO	RESTRICTED TO
A3	00779	C-208914	—

CUSTOMER DRAWING | SCALE 5:1 | SHEET 1 OF 1 | REV C1