Chipsmall Limited consists of a professional team with an average of over 10 year of expertise in the distribution of electronic components. Based in Hongkong, we have already established firm and mutual-benefit business relationships with customers from,Europe,America and south Asia,supplying obsolete and hard-to-find components to meet their specific needs.

With the principle of “Quality Parts,Customers Priority,Honest Operation,and Considerate Service”,our business mainly focus on the distribution of electronic components. Line cards we deal with include Microchip,ALPS,ROHM,Xilinx,Pulse,ON,Everlight and Freescale. Main products comprise IC,Modules,Potentiometer,IC Socket,Relay,Connector.Our parts cover such applications as commercial,industrial, and automotives areas.

We are looking forward to setting up business relationship with you and hope to provide you with the best service and solution. Let us make a better world for our industry!

Contact us

Tel: +86-755-8981 8866 Fax: +86-755-8427 6832
Email & Skype: info@chipsmall.com Web: www.chipsmall.com
Address: A1208, Overseas Decoration Building, #122 Zhenhua RD., Futian, Shenzhen, China

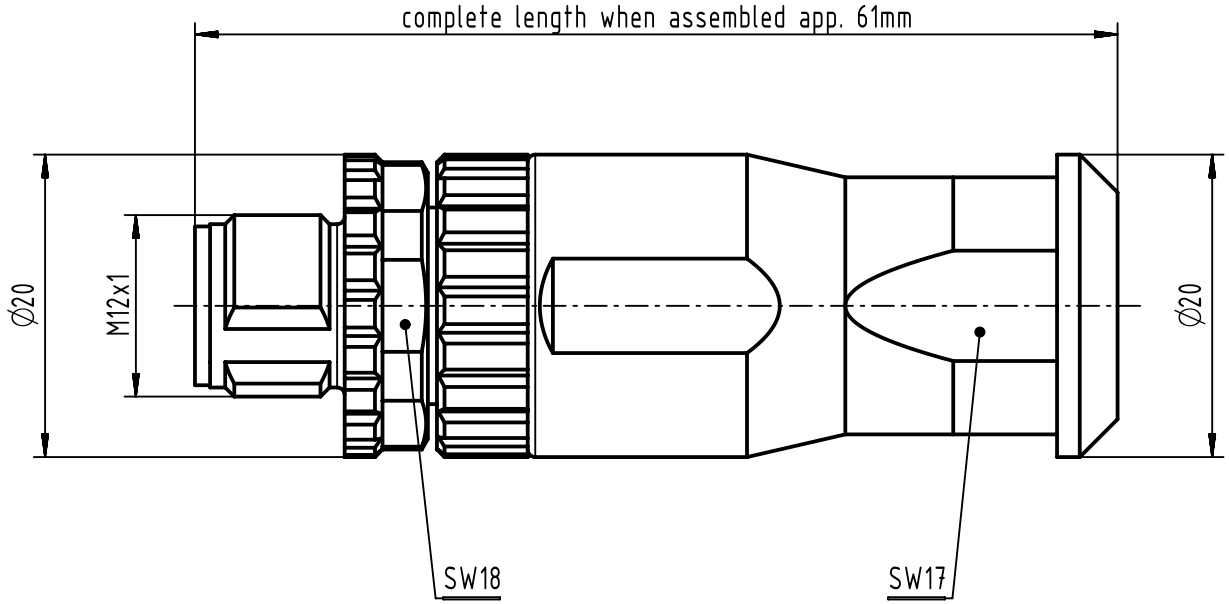

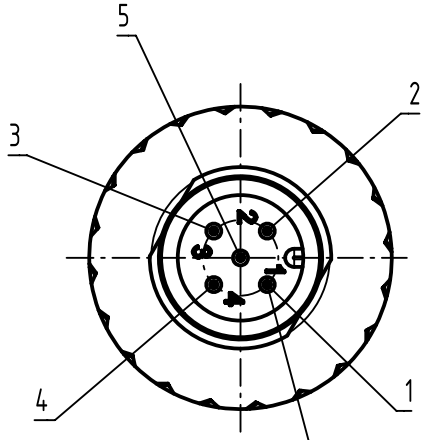

contact face acc. to
IEC 61076-2-101

conductor cross section	1.5mm² max. AWG16
cable outside diameter	4 - 8mm

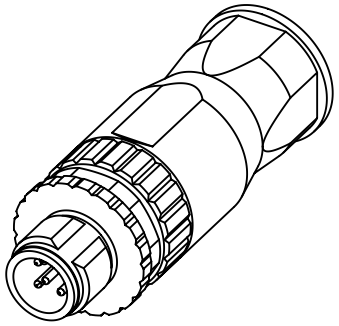

All Dimensions in mm
Original Size DIN A4

Scale 2:1

Free size tol.

Ref.

Sub.

All rights reserved

Department EC PD - DE

HARTING Electronics GmbH
D-32339 Espelkamp

Created by	Inspected by	Standardisation	Date	State
EISFELD	WELLMANN	KOHLER	2015-05-11	Final Release

Title: HARTING M12 screw straight 5-pole A-coded male

Doc-Key / ECM-Nr.
100619001/UGD/000/A
500000088343

Type: TB

Number: 21033191501

Rev.: A

Page: 1/1

A4