Chipsmall Limited consists of a professional team with an average of over 10 year of expertise in the distribution of electronic components. Based in Hongkong, we have already established firm and mutual-benefit business relationships with customers from,Europe,America and south Asia,supplying obsolete and hard-to-find components to meet their specific needs.

With the principle of “Quality Parts,Customers Priority,Honest Operation,and Considerate Service”,our business mainly focus on the distribution of electronic components. Line cards we deal with include Microchip,ALPS,ROHM,Xilinx,Pulse,ON,Everlight and Freescale. Main products comprise IC,Modules,Potentiometer,IC Socket,Relay,Connector.Our parts cover such applications as commercial,industrial, and automotives areas.

We are looking forward to setting up business relationship with you and hope to provide you with the best service and solution. Let us make a better world for our industry!

Contact us

Tel: +86-755-8981 8866 Fax: +86-755-8427 6832
Email & Skype: info@chipsmall.com Web: www.chipsmall.com
Address: A1208, Overseas Decoration Building, #122 Zhenhua RD., Futian, Shenzhen, China

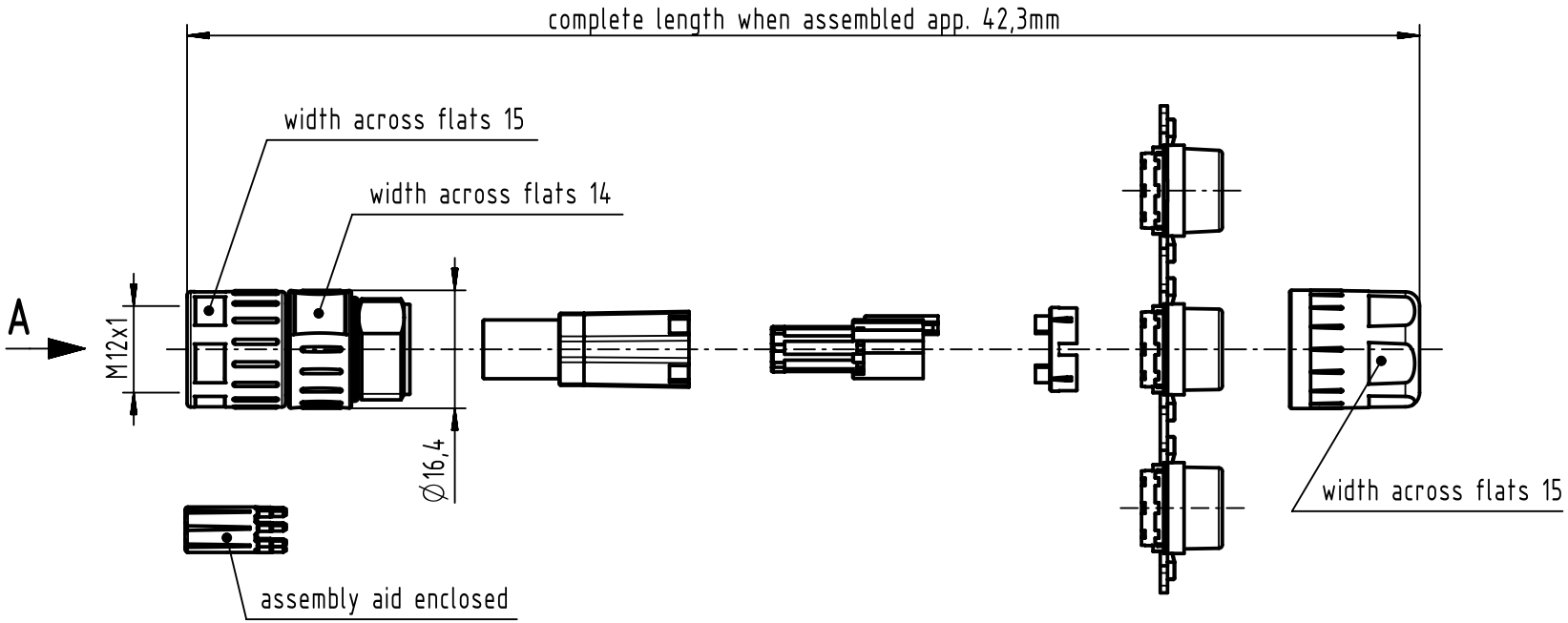

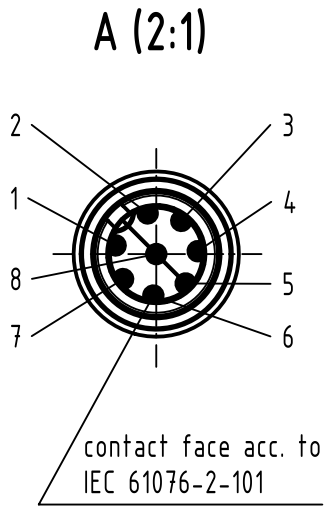

order contacts separately

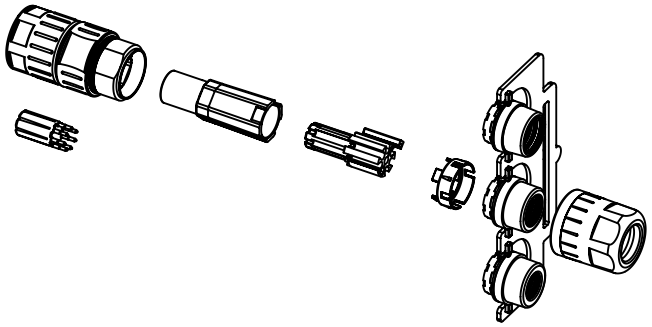

5,7-8,8mm	AWG 26-22	21 01 100 9022
cable Ø	**wire gauge**	**part number**

All Dimensions in mm Original Size DIN A4	Scale 1:1	Free size tol.		Ref. Sub. TB 21038212805 / 500000088640 / 2015-05-22	
All rights reserved Department EC PD - DE	Created by HASSE	Inspected by GENAU	Standardisation HOFFMANN	Date 2015-12-09	State Final Release
HARTING Electronics GmbH D-32339 Espelkamp	Title M12 crimp Slim Design 8-pole A-coded female				Doc-Key / ECM-Nr. 100580366/UGD/000/B 500000098214
	Type TB	Number 21038212805		Rev. B	Page 1/1

A4